SCHEDULE D

PLANS & STUDIES

i. Draft Severance Plan
ii. Conceptual Site Plan
iii. Planning Opinion Letter by Ron Davidson Land Use Planning dated June 21, 2024.
iv. Traffic Impact Study by Paradigm Transportation Solutions Inc. dated May 2024.
v. Conceptual Engineering Letter by GEI Consultants dated July 11, 2024.

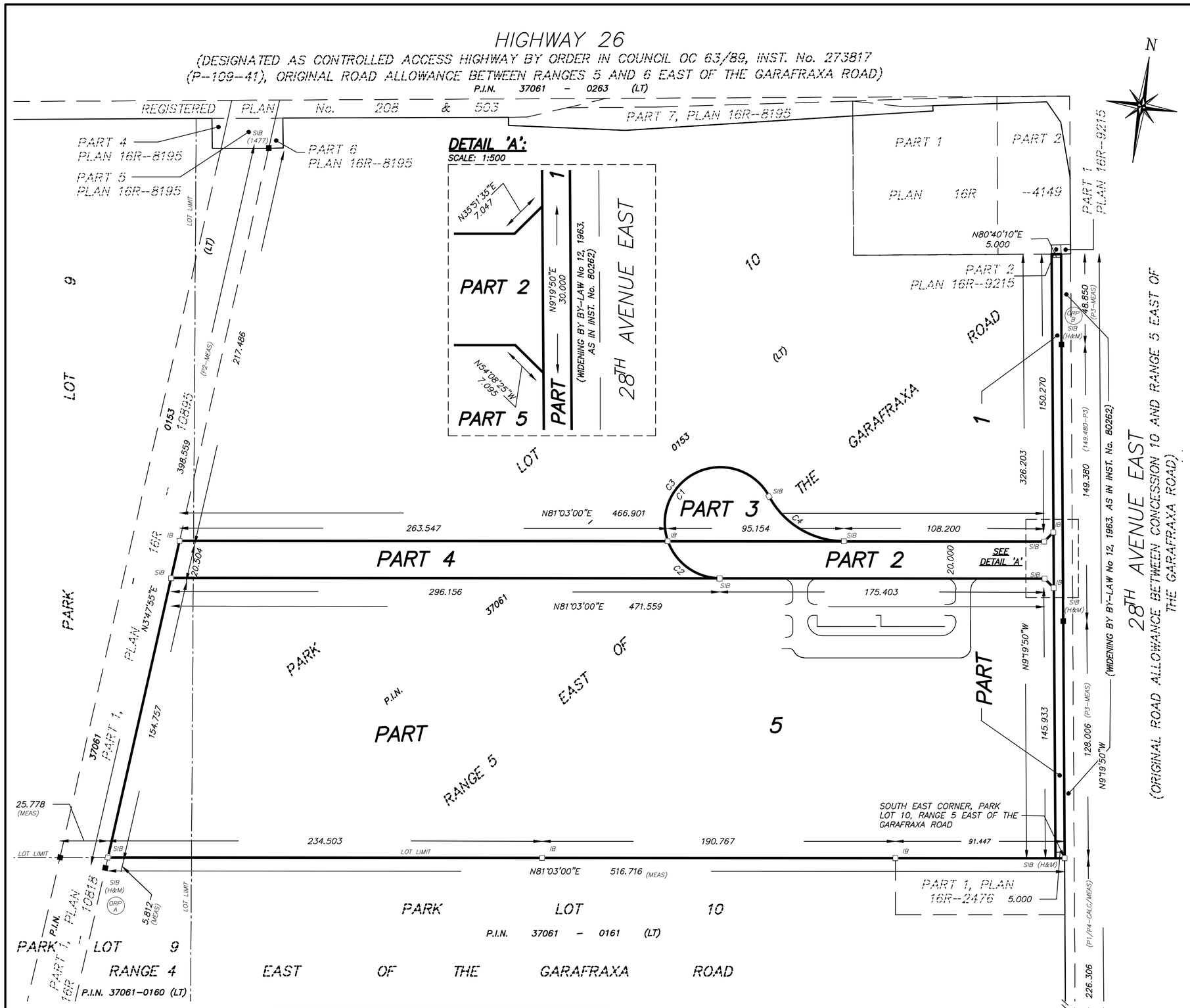

I REQUIRE THIS PLAN TO BE DEPOSITED UNDER THE LAND TITLES ACT

DATE _____

_____
TREVOR D.A. McNEIL, O.L.S.

PLAN 16R–

RECEIVED AND DEPOSITED

DATE _____

_____
REPRESENTATIVE FOR THE LAND REGISTRAR FOR THE LAND TITLES DIVISION OF GREY (No. 16)

SCHEDULE

PART	LOT	CONCESSION	P.I.N.	AREA (m^2)
1	PART OF PARK LOT 10	RANGE 5 EGR	PART OF 37061–0153 (LT)	1631.1
2				4040.2
3				2220.3
4				5469.3
5				74567.2

PART 1 COMPRISES PART OF P.I.N. 37061–0153 (LT)

PLAN OF SURVEY
OF PART OF
PARK LOTS 9 & 10
RANGE 5 E.G.R.
(GEOGRAPHIC TOWNSHIP OF SYDENHAM)
NOW IN THE
CITY OF OWEN SOUND
COUNTY OF GREY

SCALE 1:1500

0 6 12 18 24 30 60 90 METRES

MTE OLS LTD.
ONTARIO LAND SURVEYORS

METRIC:
DISTANCES AND CO–ORDINATES SHOWN ON THIS PLAN ARE IN METRES AND CAN BE CONVERTED TO FEET BY DIVIDING BY 0.3048.

AREAS SHOWN ON THIS PLAN ARE IN SQUARE METRES AND CAN BE CONVERTED TO SQUARE FEET BY MULTIPLYING BY 10.7639.

LEGEND:
□	DENOTES PLANTED MONUMENT
■	DENOTES FOUND MONUMENT
SIB	DENOTES STANDARD IRON BAR
IB	DENOTES IRON BAR
WIT	DENOTES WITNESS
MEAS	DENOTES MEASURED
CALC	DENOTES CALCULATED
1477	DENOTES JOHN EDWIN WHITE, O.L.S.
H&M	DENOTES HEWETT & MILNE LTD., O.L.S.'s
RP	DENOTES REGISTERED PLAN
P1	DENOTES PLAN 16R–2476
P2	DENOTES PLAN 16R–10895
P3	DENOTES PLAN 16R–4149
P4	DENOTES PLAN 16R–9391

CURVE SCHEDULE

ID	RADIUS	ARC	CHORD	BEARING	DELTA
C1	30.000	126.316	51.633	N22°03'15"E	241°14'42"
C2	30.000	36.729	34.478	N63°29'40"W	70°08'48"
C3	30.000	89.587	59.819	N57°07'40"E	171°05'54"
C4	46.000	49.547	47.186	N68°00'50"W	61°42'48"

SURVEYOR'S CERTIFICATE:
I CERTIFY THAT:
1. THIS SURVEY AND PLAN ARE CORRECT AND IN ACCORDANCE WITH THE SURVEYS ACT, THE SURVEYORS ACT AND THE LAND TITLES ACT AND THE REGULATIONS MADE UNDER THEM.
2. THE SURVEY WAS COMPLETED ON THE 3RD DAY OF OCTOBER, 2023.

_____ DATE

_____
TREVOR D.A. McNEIL
ONTARIO LAND SURVEYOR

THIS PLAN OF SURVEY RELATES TO AOLS PLAN SUBMISSION FORM NUMBER:
ADD JOB TO PIMARC

NOTES:
BEARINGS ARE UTM GRID, DERIVED FROM GPS OBSERVATIONS USING THE CAN–NET NETWORK AND ARE REFERRED TO UTM ZONE 17, NAD83 (CSRS v6) EPOCH 2010.00.

DISTANCES ON THIS PLAN ARE GROUND DISTANCES AND CAN BE CONVERTED TO GRID DISTANCES BY MULTIPLYING BY THE COMBINED SCALE FACTOR OF 0.999576800.

ALL COORDINATES ARE DERIVED FROM GPS OBSERVATIONS USING THE CAN–NET NETWORK AND ARE REFERRED TO UTM ZONE 17, NAD83 (CSRS v6) EPOCH 2010.00 TO AN URBAN ACCURACY IN ACCORDANCE WITH SEC. 14 (2) OF O.REG. 216/10

POINT ID	NORTHING	EASTING
ORP A	4935486.705	507855.760
ORP B	4935846.457	508321.396

COORDINATES CANNOT, IN THEMSELVES, BE USED TO RE–ESTABLISH CORNERS OR BOUNDARIES SHOWN ON THIS PLAN

FOR BEARING COMPARISON, A ROTATION OF 0°0'0" HAS BEEN APPLIED TO PLAN 01R–12345 (P1) TO CONVERT TO GRID BEARINGS

FOR BEARING COMPARISON, ROTATIONS HAVE BEEN APPLIED TO THE FOLLOWING PLANS TO CONVERT THEM TO GRID BEARINGS

PLAN ID	ROTATION AMOUNT	DIRECTION
16R–2476 (P1)	2°2'20"	CLOCKWISE
16R–10895 (P2)	0°0'10"	CLOCKWISE
16R–4149 (P3)	2°2'20"	CLOCKWISE

MTE ONTARIO LAND SURVEYORS LTD.
365 HOME STREET
STRATFORD, ONTARIO, N5A 2A5
TEL: 519–271–7952

Cad File: P:\P\54194\100\54194–100–R1.DWG | COGO : 54194–100–UTMGROUND.ASC
Drawn By : C.J./M. MARSH | Checked By : T. MCNEIL, OLS | File No : 54194–100–R1 (L)

Conceptual Site Plan (for school on severed lot)

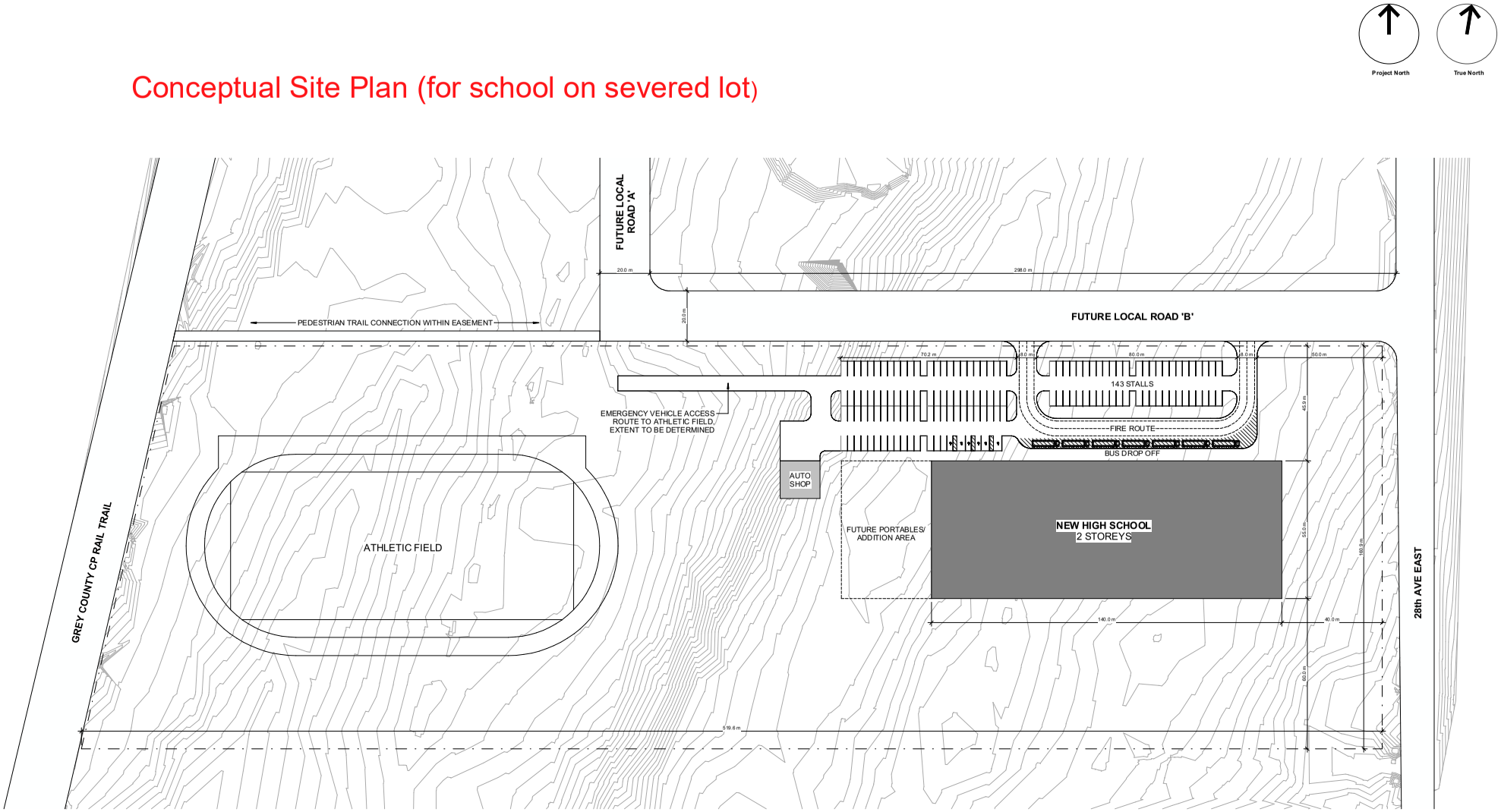

1 SITE PLAN
1 : 700

NEW OWEN SOUND HIGH SCHOOL

PRELIMINARY SITE PLAN

23026
2024-03-19

SRM architects+ urban+designers

RON DAVIDSON
LAND USE PLANNING CONSULTANT INC.

June 21, 2024

City of Owen Sound
808 2nd Avenue East
Owen Sound, ON
N4K 2H4

Attention: Jacklyn Iezzi
Senior Planner

Dear Jacklyn:

Re: Consent Application
Part of Park Lots 9 and 10, Range 5, EGR,
Geographic Township of Sydenham
City of Owen Sound
Owner: Wilma Vandolder

Further to numerous pre-consultation discussions with City staff regarding the above-noted property, enclosed please find a completed Consent application.

To assist your office in its review and evaluation of the requested severance, I offer the following:

Purpose of Application:

The purpose of the Consent application is to sever a 7.5-hectare lot, which will be purchased by the Bruce-Grey Catholic School Board (BGCSB) for the purposes of erecting a new school serving children enrolled in Grads 9 to 12.

The balance of the property, comprising 9.3 hectares, will be retained by current owner Wilma Vandolder for future development, with the exception of two small parcels. As a condition of consent, the owner must convey a 1.0-hectare parcel to the City which will be used in the future as a municipal road providing access to the new school and to future development on

265 BEATTIE STREET OWEN SOUND ONTARIO N4K 6X2
TEL: 519-371-6829 ronalddavidson@rogers.com www.rondavidson.ca

the retained lands. The owner must also grant a 0.2-hectare parcel along the east side of the entire property to the County for the future widening of 28th Avenue East (Grey Road 5).

The proposed lot creation and land conveyances to the City and County are illustrated on the attached drawing.

A Conceptual Site Plan showing the intended school development is also provided.

Approvals Required:

In order for Ms. Vandolder to convey 7.5 hectares of land to the BGCSB, approval of a Consent application by the City of Owen Sound Committee of Adjustment is required. Said application has been filed with the City. Certain conditions will be imposed by the Committee and must be addressed before the deed for the severed parcel can be certified and the lands are conveyed to the BGCSB.

Upon taking ownership of the severed parcel, the BGCSB will apply to amend the current zoning of these lands to allow for a school. That application will be filed upon the completion of a series of background reports, as discussed below. City Council is the approval authority for Zoning By-law Amendments.

The BGCSB must also submit a Site Plan Control application to the City. This application will likely be filed in conjunction with the Zoning By-law Amendment application submission. City staff are responsible for making decisions for Site Plan Agreements.

Pre-consultation:

The owner of the subject property and the BGCSB have been involved in numerous pre-consultation meetings with City staff regarding the use of the severed parcel as a school site. Grey County, Grey Sauble Conservation Authority, and the Ministry of Transportation have also provided input into this development proposal.

As a result of these discussions, the BGCSB has initiated a series of studies addressing matters pertaining to servicing, stormwater management, traffic, ecology, archaeology, etc. Upon completion of these studies, a Zoning By-law Amendment application package will be filed with the City of Owen Sound and will likely be accompanied by the Site Plan Control Application.

City staff have agreed that the Consent application can proceed at this time. Approval of the application will enable the BGCSB to take ownership of the severed parcel by the end of August 2024.

Subject Lands:

The subject property is located in Owen Sound's northeast quadrant, with frontages along 10th Street East (Provincial Highway No. 26) and 28th Avenue East (Grey Road 5).

Approximately 11 hectares of the site are actively cash-cropped. A small, intermittent watercourse (drainage ditch) traverses the west side of the site, mostly in a north-south direction. A small, wooded area exists on the retained parcel. The balance of the property is scrublands.

Adjacent Land Uses:

Lands within the immediate vicinity of the subject property have mostly remained undeveloped, primarily due to the fact that municipal services are not yet available in this area. A vacant lot exists to the immediate northeast, at the southwest corner of the 10th Street East / 28th Avenue intersection. A business park is located at the northwest corner of the same intersection and, to date, is occupied only by a window / door retail store and self-storage units. A small parcel containing a house is situated to the immediate south. A large lot, currently used for farming, also exists to the south and presumably will be developed for residential purposes in the future. The Grey County recreational "rail trail" follows the westerly boundary of the site. West of the trail is a large, partially-forested parcel that was recently approved, in part, for a commercial / residential development. The lands located along the east side of 28th Avenue East are farmed and are located outside of the City's municipal boundaries.

Owen Sound Zoning By-law:

The subject property is currently zoned predominantly 'RUR' (Rural) on Schedule A of the City of Owen Sound Zoning By-law. The intermittent watercourse is zoned 'ZH' (Hazard Lands).

Permitted uses in the 'RUR' zone include agriculture and a detached dwelling.

The 'minimum lot area' and 'minimum lot frontage' requirements of the 'RUR' zone are 1.0 hectares and 10 metres, respectively. The severed and retained parcels will comply with these minimum standards. As such, the proposed severance will conform to the City's Zoning By-law.

In order for the severed parcel to be used as a school, these lands must be rezoned to 'I' (Institutional). The Zoning By-law Amendment application will be filed with the City once the BGCSB has taken ownership of the severed parcel and the various background studies have been completed.

Owen Sound Official Plan:

Schedule A of the City's Official Plan designates the subject lands (i.e. severed and retained parcels) as 'East City Commercial', 'Residential', 'Open Space', and 'Hazard Lands'.

Schedule A-2 of the Official Plan places the subject property within the 'Sydenham Heights Phase One' secondary planning area and designates the lands as 'East City Commercial', 'High Density Residential', 'Low Density Residential', 'Open Space', and 'Hazard Land'. It should be noted that no portion of the severed lot is designated 'East City Commercial'.

The purpose of this Planning Justification Report is to address the planning rationale only for the proposed lot creation. A more detailed Planning Justification Report addressing the use of the land for institutional purposes will be included in the Zoning By-law Amendment application submission at a later time, once the other supporting reports have been prepared by the team of consultants. This notwithstanding, it should be stated now that an 'I' (Institutional) zoning can be considered under the current land use designations without having to amend the Official Plan.

Of relevance to the submitted Consent application are the lot creation policies contained in Section 9.3.2 *Committee of Adjustment*. Please consider the following:

9.3.2.1 In accordance with the relevant provisions of the Planning Act, the Committee of Adjustment shall deal with all applications for minor variances, to the provisions of the Zoning By-law and other by-laws, which implement this Plan, applications for consent and changes to non-conforming uses.

Comment: The proposed lot creation conforms to the Zoning By-law. The future institutional use of the severed parcel will require an amendment to the Zoning By-law; however, that future Planning Act application is not relevant to the Consent application before the City at this time.

9.3.2.2 Plans of subdivision shall be the preferred method of land division. Consents should only be granted when it is clearly not necessary or in the public interest that the land be developed by plan of subdivision. Plans of subdivision will be required and applications for consent will not be approved under the following circumstances:

a. *More than three lots (two severed and one retained) from a land holding are being created.*

b. *Lots created require a new public road for the provision of access.*

c. *The provision or extension of municipal services (water and/or sewer) is required.*

d. *Other matters that may arise during the review of the proposed development.*

Comment: The idea of submitting a Plan of Subdivision application to the City, as opposed to the Consent application, was discussed during the pre-consultation exercise. City staff advised that the lot creation through the Consent application process would be acceptable, on the understanding that certain conditions would be imposed, including the conveyance of land to the City for future road purposes, conveyance of land to the County for the widening of 28th Avenue East (County Road 5), and the payment of parkland dedication to the City.

9.3.2.3 Notwithstanding Section 9.3.2.2a) the requirement for a plan of subdivision may be waived for infilling or redevelopment of lots having frontage on a public road that is maintained on a year round basis in an area serviced by municipal water and sanitary sewers subject to the provisions of section 9.3.3 of this Plan.

Comment: As noted above, the City supports the Consent application process. Both the severed and retained parcels currently have frontage along an open, public road, although access is restricted from this busy thoroughfare, and therefore a new road will be constructed to provide vehicular access to the school. With regard to municipal services, sanitary sewers and water will need to be extended to the severed parcel. Such details will be finalized in the Site Plan Agreement.

9.3.2.4 Regard shall be had to the following criteria when considering an application for consent:

a. *The lands front onto an existing, assumed public road that is maintained on a year round basis.*

b. *The consents shall have the effect of infilling in existing areas and not extending existing development.*

c. *Creation of the lot does not compromise the long-term use of the remaining land or retained parcel.*

d. The size of the parcel of land created by consent should be appropriate for the use proposed.

e. Soil and drainage conditions are suitable or can be made suitable to permit the proper siting of buildings.

f. Impact on any adjacent built heritage or archaeological resource.

Comment: The severed and retained parcels will front onto a year-round public road.

The lot creation may not necessarily constitute infilling; however, there appears to be no other options within the City for the BGCSB to acquire a parcel of this size to construct a new school. The BGCSB spent several months looking at alternative sites, but no other properties were feasible for such a land use. Of significance to this discussion is the fact that none of the costs associated with extending services to the proposed school site and constructing a new road will be borne by the City's taxpayers. For these reasons, the lot creation should not be considered premature.

9.3.2.5 No parcel shall be created which does not conform to the provisions of the Zoning By-law except where a minor variance has been approved.

Comment: The severed and retained parcels will comply with the 'RUR' zoning provisions that currently apply to the subject lands, as explained above.

9.3.2.6 On the granting of an application for consent, appropriate conditions may be imposed, including necessary road widening, which may include the entering into of agreements with the City to ensure fulfillment of the conditions and/or City policies.

Comment: The City has advised that conditions will be imposed regarding, among other things, the conveyance of land to Owen Sound for a new municipal road, conveyance of land to the County for the widening of 28th Avenue West (Grey Road 5), and a cash-in-lieu of parkland dedication.

9.3.2.7 Subject to the specific policies of this Plan, consents may be permitted for the purpose of making lot boundary corrections, granting easements, conveyances and consolidations and other such administrative or technical matters provided that such matters are minor in nature.

Comment: The purpose of the Consent application is to create a new lot, although lands will be conveyed through this lot creation process to the City and County for future road and road widening purposes.

9.3.2.8 Nothing in this Plan shall adversely affect the continuance of any use(s) legally existing on the date this Plan was adopted by the City.

Comment: This policy is not relevant.

9.3.2.9 The City may recognize the existing use of land in the implementing Zoning By-law. The City, in co-operation with landowners, will attempt to reduce the number of nonconforming uses whenever and wherever possible according to the policies of this Plan.

Comment: This policy is not relevant.

9.3.2.10 The City may enact delegation of powers under the Planning Act for select Committee of Adjustment applications.

Comment: The Committee of Adjustment will be making the decision on this Consent application.

In view of the above, the proposed severance is deemed to conform to the City's Official Plan.

Provincial Policy Statement:

The Provincial Policy Statement (PPS) generally directs urban-type development, including residential, commercial, industrial, open space / recreational, and institutional, to the designated settlement areas such as Owen Sound.

The PPS also encourages development to be serviced with municipal water and sanitary sewers where such services exist. The future school on the severed parcel will be fully serviced.

Furthermore, the PPS protects natural heritage features and areas of archaeological significance. In this regard, an Environmental Impact Study and Archaeological Assessment are currently being conducted, and both documents will be filed as part of the future Zoning By-law Amendment application submission to the City.

Moreover, the PPS promotes safe and efficient transportation systems on municipal streets, County roads, and Provincial highways. To ensure that no negative impact is created as a result of traffic increase, a Traffic Impact Study and Transportation Plan are being prepared and will also form part of the Zoning By-law Amendment application submission. The Ministry of Transportation, Grey County Transportation Department, and City staff will be involved in the review of these documents.

Based on the foregoing, the proposed lot creation is consistent with the PPS. A more detailed evaluation of the intended use of the severed parcel for school purposes will be provided through another Planning Justification Report at the rezoning stage.

Concluding Comments:

The proposed lot creation complies with the provisions of the applicable provisions of the City's Zoning By-law, conforms to the relevant policies of the Owen Sound Official Plan, and is consistent with the Provincial Policy Statement. For these reasons, the application has merit and can be given favourable consideration.

Approval of the Consent application will allow Ms. Vandolder to convey the severed parcel to the Bruce-Grey Catholic School Board in the near future. Once the various background studies have been prepared to support a new school on the severed parcel, an application to change the zoning will be filed, along with a Site Plan Control application.

I trust this information is satisfactory and will enable your office to place the Consent application on the Committee of Adjustment's July 8th, 2024 agenda.

Should you require anything further, please do no hesitate to contact the undersigned.

Sincerely,

Ron Davidson, BES, RPP, MCIP

c.c. Alecia Lantz (BGCSB)
Chad Aitken (BGCSB)

Attachments: Severance Sketch
Conceptual Site Plan (for new school on severed parcel)

Severance Sketch

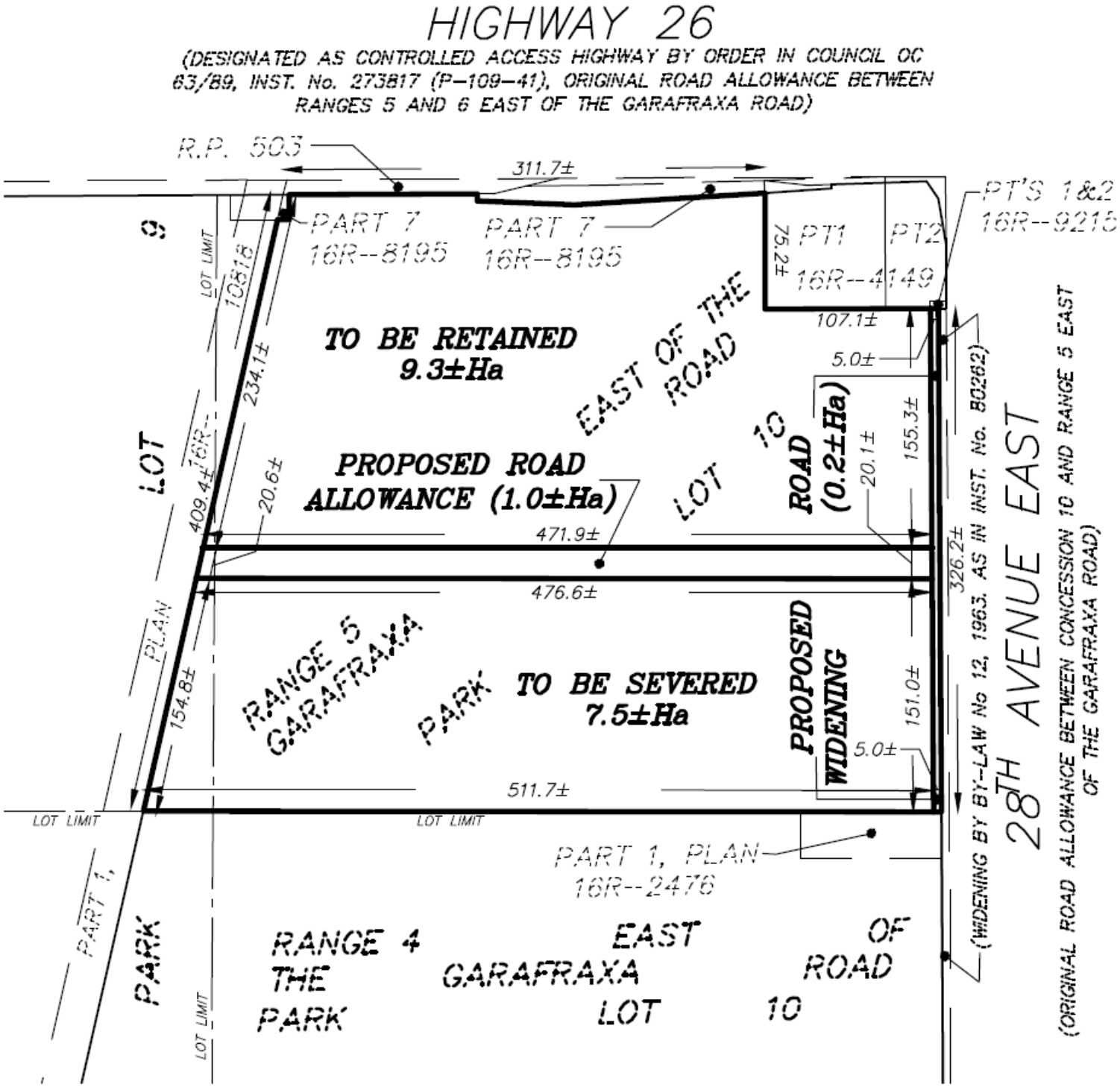

Conceptual Site Plan (for school on severed lot)

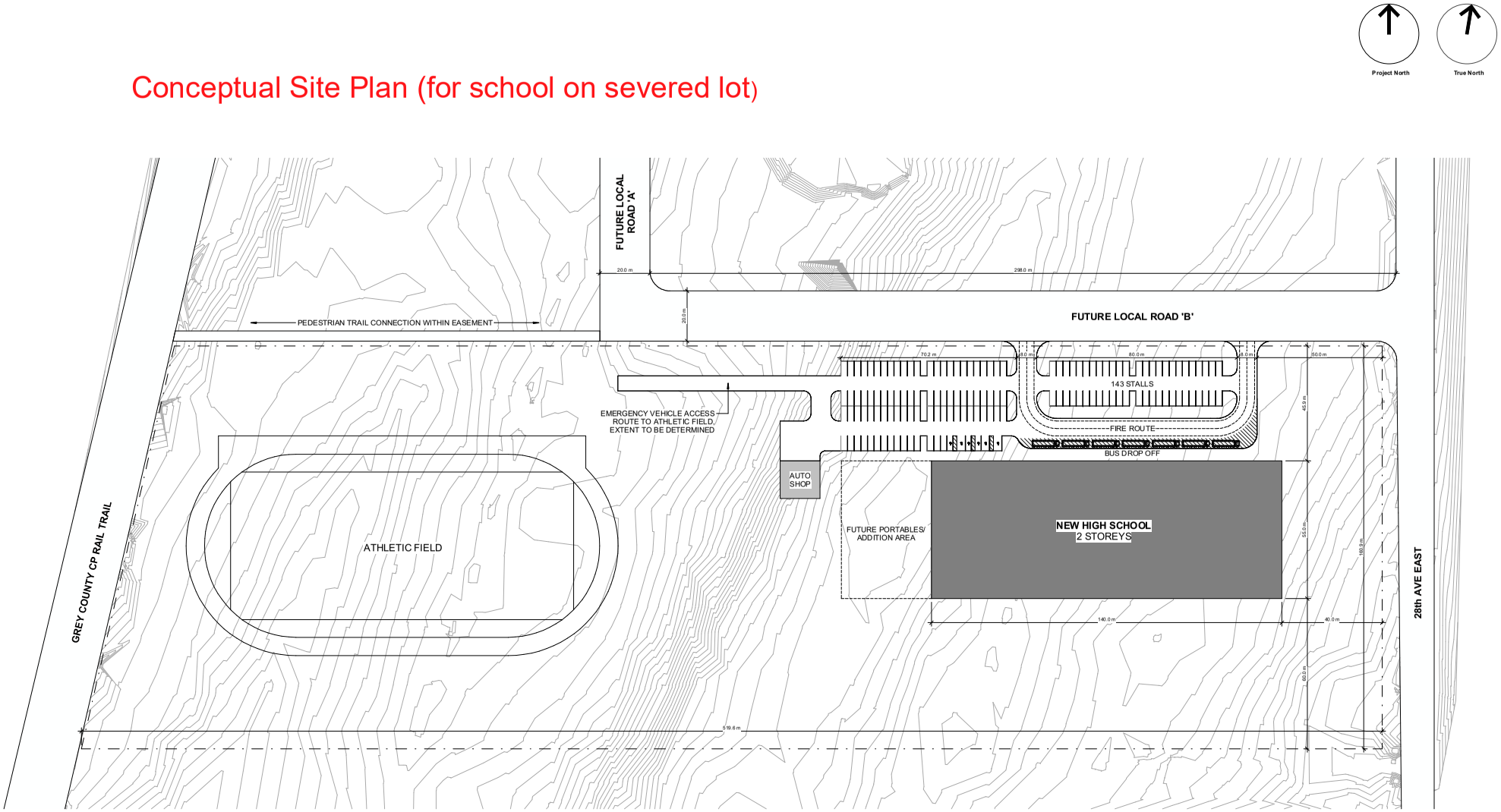

1 SITE PLAN
1 : 700

NEW OWEN SOUND HIGH SCHOOL

PRELIMINARY SITE PLAN

23026
2024-03-19

SRM architects+ urban+designers

New High School, 16th Street and 28th Avenue, Owen Sound

Transportation Impact Study

Paradigm Transportation Solutions Limited

2024-05
230607

ptsl.com

Great Place To Work. Certified NOV 2023 - NOV 2024 CANADA

Project Summary

Project Number:

230607

Date and Version:

2024-05
1.0.0

Client:

Bruce-Grey Catholic District School Board

Consultant Project Team

Rajan Philips, M.Sc. (PI), P.Eng.
Patrick Neal, EIT

Paradigm Transportation Solutions Limited

5A-150 Pinebush Road
Cambridge ON N1R 8J8
p: 519.896.3163
905.381.2229
416.479.9684
www.ptsl.com

New High School, 16th Street and 28th Avenue, Owen Sound Transportation Impact Study

<< Original Signed By >>

Rajan Philips, P.Eng.

Disclaimer

This document has been prepared for the titled project or named part thereof (the "project") and except for approval and commenting municipalities and agencies in their review and approval of this project, should not be relied upon or used for any other project without an independent check being carried out as to its suitability and prior written authorization of Paradigm Transportation Solutions Limited being obtained. Paradigm Transportation Solutions Limited accepts no responsibility or liability for the consequence of this document being used for a purpose other than the project for which it was commissioned. Any person using or relying on the document for such other purpose agrees and will by such use or reliance be taken to confirm their agreement to indemnify Paradigm Transportation Solutions Limited for all loss or damage resulting there from. Paradigm Transportation Solutions Limited accepts no responsibility or liability for this document to any party other than the person by whom it was commissioned and the approval and commenting municipalities and agencies for the project.

To the extent that this report is based on information supplied by other parties, Paradigm Transportation Solutions Limited accepts no liability for any loss or damage suffered by the client, whether through contract or tort, stemming from any conclusions based on data supplied by parties other than Paradigm Transportation Solutions Limited and used by Paradigm Transportation Solutions Limited in preparing this report.

© 1998 Paradigm Transportation Solutions Limited. All rights reserved.

Executive Summary

Content

Paradigm Transportation Solutions Limited (Paradigm) has been retained to conduct this Transportation Impact Study (TIS) for a proposed new School located at the southwest quadrant of 16th Street and 28th Avenue in the City of Owen Sound.

The impact assessment also includes the future development of currently vacant lands to the north and south of the school site for commercial and residential uses, respectively.

This TIS includes an analysis of existing traffic conditions, a description of the proposed development, analysis of future traffic conditions, and assessment of development traffic impacts with recommendations as appropriate to accommodate the proposed development.

Background

The proposed New High School is to be located on the west side of 28th Avenue East, approximately 300 metres south of 16th Street. The school site is 20 acres in area, with a frontage of approximately 160 metres on 28th Avenue East, and a depth of approximately 520 metres.

The north boundary of the site will abut a proposed future local road, comprising an east-west portion that will connect to 28th Avenue East at an all-moves T-intersection, approximately 240 metres south of 16th Street; and a north-south portion that will connect to 16th Street at a restricted Right-in-Right-out intersection, approximately 300 metres west of 28th Avenue. Only the east-west portion of the local road is to be constructed in conjunction with school construction.

A similar future local road alignment is proposed for the area south of the school site, comprising an east-west portion and a north-south portion respectively connecting to 28th Avenue East and 8th Street at two all-moves T-intersections.

The proposed local roads are intended to serve development of the lands to the north and south of the school site to respectively accommodate commercial and residential land uses.

The School Development

The school will include a two-storey building (7,700 m^2, footprint accommodating 12,634 m^2 GFA) located at the easterly end along 28th Avenue East; and an Athletic Field located to the west of the School

Building. Two separate driveways are identified on the proposed future road (as noted above) for entrance and exit, along with a Fire Route, Bus Drop Off location, and a parking layout of 143 spaces. The easterly driveway is located approximately 50 metres from the east property line, and the two driveways are separated by 80 metres.

The school will accommodate 1,012 students and 90-95 staff including teachers and custodians.

The new school is expected to be opened for the school year starting in 2028.

Adjacent Lands

The lands north and south of the school site are slated to be developed for commercial and residential uses, respectively. The transportation impact assessment for the development of the adjacent lands is based on the following road network, land use and timing assumptions identified in consultation with the City of Owen Sound:

- Proposed Future Roads
  - North of the school site, a future local road is proposed, comprising an east-west portion that will connect to 28th Avenue East at an all-moves T-intersection; and a north-south portion that will connect to 16th Street at a restricted Right-in-Right-out (RIRO) intersection.
  - A similar future local road alignment is proposed for the area south of the school site, comprising an east-west portion and a north-south portion respectively connecting to 28th Avenue East and 8th Street at two all-moves T-intersections.
  - As noted, only the east-west portion of the future local road abutting the school site will be constructed in conjunction with the school development for anticipated opening in 2028.
  - All other local road sections will be constructed in conjunction with the development of the Adjacent Lands.
- Development Statistics:
  - Commercial Development (North): 37,200 m^2 GFA.
  - Residential Development (South): 500 units low density housing, and 200 units medium/high density.
- Development Timing:
  - 2028 – No development on the Adjacent Lands.

- 2033 – 50% of both commercial and residential developments.
- 2038 – 100% of both commercial and residential developments.

An additional development scenario for the residential lands corresponding to a maximum yield of 1,500 dwelling units by 2038 is also analysed for transportation impact assessment.

TIS Scope

The scope of the Transportation Impact Study (TIS) was finalized through the development of a Terms of Reference for the TIS in consultation with the City of Owen Sound, the County of Grey and the Ministry of Transportation. The main elements of the Terms of Reference (included in **Appendix A**) are:

- **Study Area Intersections:**
  - 16th Street (Highway 26) and 28th Avenue (Grey Road 5) (signalized);
  - 8th Street (Grey Road 5) and 28th Avenue (Grey Road 5) (unsignalized);
  - proposed Future Road (North) and 28th Avenue (all-moves T-intersection);
  - proposed Future Road (North) and 16th Street (RIRO T-Intersection);
  - school access points on the Proposed Future Road (North) (with need assessment for left-turn lane); and
  - future local road (south) intersection on 28th Avenue and 8th Street to the south of the school site.
- **Analysis Periods:** Weekday AM and PM peak hours. It is noted that school traffic AM peak hour coincides with road traffic AM peak hour; and although school traffic PM peak hour is ahead of the road traffic PM peak hour, the two are conservatively assumed to coincide for the analysis.
- **Background Developments:** The following background developments are assumed to in place by 2028:
  - Industrial Development (16th Street and 28th Avenue);
  - 2275 16th Street; and
  - Heritage Grove Centre.

- **Adjacent Lands:** Commercial and Residential Developments as noted above:
  - Commercial Development (to the north of the school site); and
  - Residential Development (to the south of the school site).
- **Traffic Conditions:** Existing (2024) Traffic Conditions and the following Future Traffic Conditions:
  - 2028: School Development and in-stream other area developments.
  - 2033: 2028 developments and 50% development of adjacent commercial and residential uses.
  - 2038: 2028 developments and 100% development of adjacent commercial and residential uses.
  - 2038 (Maximum Yield Scenario): Includes 1,500 residential units in the adjacent lands to the south.
- **Intersection Lane Configurations**: The following lane configurations are assumed for the existing and future study area intersections:
  - The existing lane configurations are assumed for the two existing intersections of 28th Avenue at 16th Street and at 8th Street.
  - The future local road intersection abutting the school site, which will be constructed in conjunction with the school development, is proposed to include a northbound left-turn lane; southbound right-turn lane; and two separate left-turn and right-turn lanes for the eastbound approach.
  - Other future local intersections include auxiliary turn lanes as appropriate in this study, subject to finalization at the time of development of the Adjacent Lands.

Conclusions

Based on the investigations carried out, it is concluded that:

- **Existing Traffic Conditions:** The study area intersections are operating at acceptable levels of service, and with no problem movements.
- **Development Trip Generation:** The school development is forecast to generate 408 equivalent vehicle trips (that include 54 school bus trips) during both the AM and PM peak hours.

- **2028 Background Traffic Conditions:** The study area intersections are forecast to operate at acceptable levels of service.
- **2028 Total Traffic Conditions:** The study area intersections are forecast to operate at acceptable levels of service.

  The Site Driveway intersections on the Future Road (North) are forecast to operate at LOS A during the AM and PM peak hours.
- **2033 Background Traffic Conditions:** The study area intersections are forecast to operate at acceptable levels of service.
- **2033 Total Traffic Conditions:** The study area intersections are forecast to operate at acceptable levels of service.

  The School Driveway intersections on the Future Road (North) are forecast to operate at satisfactory levels of service (LOS A/B) during the AM and PM peak hours.
- **2038 Background Traffic Conditions:** The study area intersections are forecast to operate at acceptable levels of service.
- **2038 Total Traffic Conditions:** The study area intersections are forecast to operate at acceptable levels of service with a few critical movements.

  The School Driveway intersections on the Future Road (North) are forecast to operate at satisfactory levels of service (LOS A/B) during the AM and PM peak hours.
- **2038 Total Traffic Conditions: Maximum Yield Scenario:** The study area intersections are forecast to operate at similar levels of service as under 2038 total traffic conditions under the original development scenario summarized above, with some additional critical movements:

  The Site Driveway intersections on the future road are noted to operate at satisfactory levels of service (LOS A/B) under 2038 total traffic conditions under the additional scenario.
- **Highway 26 (16th Street) and Grey County Road 5 (28th Avenue) Intersection:** This intersection is under MTO's jurisdiction and operates under traffic signal control. MTO's Access Management Policy requires a minimum separation distance of 400 metres from this intersection to any new road connection or intersection on either 28th Avenue or 16th Street.

  The future Local Road connection north of the School Site, at an all-moves T-intersection, on 28th Avenue is to be located at approximately 237 metres south of the intersection. A second

Local Road connection at a restricted RIRO intersection on 16th Street is to be located at approximately 300 metres west of the intersection.

The above intersection separation distances are based on the locations of property appropriate for development and existing physical constraints. The road system is also a part of land use changes and corresponding access requirements.

The intersection operational and queuing analyses indicate acceptable levels of service and adequate separation distances to accommodate queuing, under future traffic conditions for all three horizon years and the respective land use scenarios.

- **Grey County Road 5 (28th Avenue) Classification and Right-of-Way:** Based on traffic projections for the 2038 Horizon Year, the roadway could remain as a Minor Arterial Road, as currently classified. The posted speed limit on 28th Avenue to the north of 8th Street could be reduced to 60 km/h, which would be same as the posted speed limit to the south of 8th Street. Although, no road widening is identified as required, the Right-of-Way for future improvements should be protected including the five-metre-wide land dedication along the frontage of the school site.

Recommendations

Based on the findings and conclusions of this study, it is recommended that the Site Plan for the proposed New School on 28th Avenue be considered for approval, along with the construction of the new east-west local road abutting the school site as identified herein.

Contents

1 Introduction 1

1.1 Overview 1
1.1.1 Adjacent Lands 2
1.2 Purpose and Scope 2

2 Existing Conditions 6

2.1 Existing Roadways 6
2.2 Transit Service 8
2.3 Traffic Volumes 8
2.4 Traffic Operations 11
2.5 Queue Analysis 14

3 School Development 16

3.1 The School Site Plan 16
3.2 School Trip Generation 18
3.3 Development Trip Distribution and Assignment 19

4 Evaluation of Future Traffic Conditions 25

4.1 Background Traffic Volumes 25
4.2 Other Area Developments 28
4.3 Adjacent Lands 29
4.3.1 Future Local Roads 29
4.3.2 Development Traffic 32
4.4 2028 Traffic Forecasts 36
4.4.1 2028 Background Traffic Conditions 36
4.4.2 2028 Total Traffic Conditions 40
4.4.3 2028 Queueing Analysis 44
4.5 2033 Traffic Forecasts 46
4.5.1 2033 Background Traffic Conditions 46
4.5.2 2033 Total Traffic Conditions 50
4.5.3 2033 Queueing Analysis 55
4.6 2038 Traffic Forecasts 57
4.6.1 2038 Background Traffic Conditions 57
4.6.2 2038 Total Traffic Operations 61
4.6.3 2038 Queueing Analysis 66
4.7 Maximum Yield Residential Development 68
4.7.1 Trip Generation 68
4.7.2 2038 Maximum Yield Scenario Total Traffic Conditions 68
4.7.3 2038 Maximum Yield Scenario Queueing Analysis 74

5 Study Area Intersections and Road Classification 76

5.1 16th Street (Highway 26) & 28th Avenue (Grey County Road 5) Intersection 76
5.2 Future Intersection of 28th Avenue and Local Road (North) 78
5.2.1 Southbound Right-Turn Lane 79
5.2.2 Eastbound Left-Turn Lane and Right-Turn Lane 79
5.2.3 Sight Distances 79
5.3 Site Driveways 82
5.4 OTM Signal Warrant 82
5.5 28th Avenue Classification and Right-of-Way 82
5.5.1 Minor Arterial Road 82
5.5.2 Road Right-of-Way 83
5.6 Active Transportation 84

6 Conclusions and Recommendations 85

6.1 Conclusions 85
6.2 Recommendations 86

Appendices

Appendix A Terms of Reference
Appendix B Existing Traffic Data
Appendix C Existing Traffic Operations Reports
Appendix D Background Development Traffic Volumes
Appendix E 2028 Background Traffic Operations Reports
Appendix F 2028 Total Traffic Operations Reports
Appendix G 2033 Background Traffic Operations Reports
Appendix H 2033 Total Traffic Operations Reports
Appendix I 2038 Background Traffic Operations Reports
Appendix J 2038 Total Traffic Operations Reports
Appendix K 2038 Maximum Yield Scenario Total Traffic Operations Reports
Appendix L Left-Turn Lane Warrant Nomographs
Appendix M OTM Signal Warrant

Figures

Figure 1.1: Location of Subject Site 5
Figure 2.1: Existing Lane Configuration and Traffic Control 7
Figure 2.2a: Existing Traffic Volumes – AM Peak Hour 9
Figure 2.2b: Existing Traffic Volumes – PM Peak Hour 10
Figure 3.1: Preliminary Site Plan 17
Figure 3.2a: 2028 Site Generated Traffic Volumes – AM Peak Hour 21
Figure 3.2b: 2028 Site Generated Traffic Volumes – PM Peak Hour 22
Figure 3.3a: 2033 & 2038 Site Generated Traffic Volumes – AM Peak Hour 23
Figure 3.3b: 2033 & 2038 Site Generated Traffic Volumes – PM Peak Hour 24
Figure 4.1: Other Area Development Locations 27
Figure 4.2: Future Lane Configuration and Traffic Controls 31
Figure 4.3: Owen Sound Employment Zones 35
Figure 4.4a: 2028 Background Traffic Volumes – AM Peak Hour 37
Figure 4.4b: 2028 Background Traffic Volumes – PM Peak Hour 38
Figure 4.5a: 2028 Total Traffic Volumes – AM Peak Hour 41
Figure 4.5b: 2028 Total Traffic Volumes – PM Peak Hour 42
Figure 4.6a: 2033 Background Traffic Volumes – AM Peak Hour 47
Figure 4.6b: 2033 Background Traffic Volumes – PM Peak Hour 48
Figure 4.7a: 2033 Total Traffic Volumes – AM Peak Hour 51
Figure 4.7b: 2033 Total Traffic Volumes – PM Peak Hour 52
Figure 4.8a: 2038 Background Traffic Volumes – AM Peak Hour 58
Figure 4.8b: 2038 Background Traffic Volumes – PM Peak Hour 59
Figure 4.9a: 2038 Total Traffic Volumes – AM Peak Hour 62
Figure 4.9b: 2038 Total Traffic Volumes – PM Peak Hour 63
Figure 4.10a: 2038 Total Traffic Volumes (Maximum Yield Scenario) – AM Peak Hour 70
Figure 4.10b: 2038 Total Traffic Volumes (Maximum Yield Scenario) – PM Peak Hour 71

Tables

Table 2.1: Intersection Peak Hours 8
Table 2.2: Existing Traffic Operations 13
Table 2.3a: Existing Through and Left-Turn Queue Analysis 15
Table 2.3b: Existing Right-Turn Queue Analysis 15
Table 3.1: Trip Generation 18
Table 3.2: Estimated Trip Distribution 19
Table 4.1: Commercial Lands Trip Generation 32
Table 4.2: Commercial Lands Estimated Trip Distribution 33
Table 4.3: Residential Lands Trip Generation 33
Table 4.4: Residential Lands Estimated Trip Distribution 34
Table 4.5: 2028 Background Traffic Operations 39
Table 4.6: 2028 Total Traffic Operations 43
Table 4.7a: 2028 Through and Left-Turn Queue Analysis 45
Table 4.7b: 2028 Right-Turn Queue Analysis 45
Table 4.8: 2033 Background Traffic Operations 49
Table 4.9a: 2033 Total Traffic Operations – AM Peak Hour 53
Table 4.9b: 2033 Total Traffic Operations – PM Peak Hour 54
Table 4.10a: 2033 Through and Left-Turn Queue Analysis 56
Table 4.10b: 2033 Right-Turn Queue Analysis 56
Table 4.11: 2038 Background Traffic Operations 60
Table 4.12a: 2038 Total Traffic Operations – AM Peak Hour 64
Table 4.12b: 2038 Total Traffic Operations – PM Peak Hour 65
Table 4.13a: 2038 Through and Left-Turn Queue Analysis 67
Table 4.13b: 2038 Right-Turn Queue Analysis 67
Table 4.14: Residential Lands Trip Generation – Maximum Yield 68
Table 4.15a: 2038 Total Traffic Operations – AM Peak Hour 72
Table 4.15b: 2038 Total Traffic Operations – PM Peak Hour 73
Table 4.16a: 2038 Maximum Yield Scenario Through and Left-Turn Queue Analysis 75
Table 4.16b: 2038 Maximum Yield Scenario Right-Turn Queue Analysis 75
Table 5.1: Future Road (North) Sight Distance Assessment 81

1 Introduction

1.1 Overview

Paradigm Transportation Solutions Limited (Paradigm) has been retained to conduct this Transportation Impact Study (TIS) for a proposed new School located at the southwest quadrant of 16th Street and 28th Avenue in the City of Owen Sound.

The impact assessment also includes the future development of currently vacant lands to the north and south of the school site for commercial and residential uses, respectively.

The proposed New High School is to be located on the west side of 28th Avenue East, approximately 300 metres south of 16th Street. The school site is 20 acres in area, with a frontage of approximately 160 metres on 28th Avenue East, and a depth of approximately 520 metres.

The north boundary of the site will abut a proposed future local road, comprising an east-west portion that will connect to 28th Avenue East at an all-moves T-intersection, approximately 240 metres south of 16th Street; and a north-south portion that will connect to 16th Street at a restricted Right-in-Right-out (RIRO) intersection, approximately 300 metres west of 28th Avenue. Only the east-west portion of the local road is to be constructed in conjunction with school construction.

A similar future local road alignment is proposed for the area south of the school site, comprising an east-west portion and a north-south portion respectively connecting to 28th Avenue East and 8th Street at two all-moves T-intersections.

The proposed local roads are intended to serve development of the lands to the north and south of the school site to respectively accommodate commercial and residential land uses.

Figure 1.1 details the subject development location.

The school will include a two-storey building (7,700 m^2, footprint accommodating 12,634 m^2 GFA) located at the easterly end along 28th Avenue East; and an Athletic Field located to the west of the School Building. Two separate driveways are identified on the proposed future road (as noted above) for entrance and exit, along with a Fire Route, Bus Drop Off location, and a parking layout of 143 spaces. The easterly driveway is located approximately 50 metres from the east property line, and the two driveways are separated by 80 metres.

The school will accommodate 1,012 students and 90-95 staff including teachers and custodians.

The new school is expected to be opened for the school year starting in 2028.

1.1.1 Adjacent Lands

The lands north and south of the school site are slated to be developed for commercial and residential uses, respectively. The transportation impact assessment for the development of the adjacent lands is based on the following road network, land use and timing assumptions identified in consultation with the City of Owen Sound:

- Proposed Future Roads
  - North of the school site, a future local road is proposed, comprising an east-west portion that will connect to 28th Avenue East at an all-moves T-intersection; and a north-south portion that will connect to 16th Street at a restricted RIRO intersection.
  - A similar future local road alignment is proposed for the area south of the school site, comprising an east-west portion and a north-south portion respectively connecting to 28th Avenue East and 8th Street at two all-moves T-intersections.
- Development Statistics:
  - Commercial Development (North): 37,200 m^2 GFA.
  - Residential Development (South): 500 units low density housing and 200 units medium/high density.
- Development Timing:
  - 2028 – No development on the Adjacent Lands.
  - 2033 – 50% of both commercial and residential developments.
  - 2038 – 100% of both commercial and residential developments.

An additional development scenario for the residential lands corresponding to 1,500 dwelling units by 2038 is also analysed for transportation impact assessment.

1.2 Purpose and Scope

The purpose of this report is to identify and assess the potential traffic impact resulting from the proposed school development. The scope of

the study, developed through a Terms of Reference prepared in consultation with the Ministry of Transportation Ontario (MTO), Grey County, and City of Owen Sound staff, the main elements of which includes:

- assessment of the current traffic and site conditions within the study area;
- estimates of background traffic growth for opening year of development (2028), five years after development (2033), and ten years after development (2038);
- the following background developments are assumed to in place by 2028:
  - Industrial Development (16th Street and 28th Avenue);
  - 2275 16th Street; and
  - Heritage Grove Centre.
- Commercial and Residential Developments as noted above:
  - Commercial Development (to the north of the school site); and
  - Residential Development (to the south of the school site).
- estimates of additional traffic generated by the subject site;
- analyses of the impact of the future traffic on the surrounding road network, including the following study area intersections:
  - 16th Street (Highway 26) and 28th Avenue (Grey Road 5) (signalized);
  - 8th Street (Grey Road 5) and 28th Avenue (Grey Road 5) (unsignalized);
  - proposed Future Road (North) and 28th Avenue (all-moves T-intersection);
  - proposed Future Road (North) and 16th Street (RIRO T-Intersection);
  - school access points on the Proposed Future Road (North) (with need assessment for left-turn lane); and
  - future local road (south) intersection on 28th Avenue and 8th Street to the south of the school site.
- recommendations, if necessary, to mitigate the site generated traffic in a satisfactory manner.

Appendix A contains the Terms of Reference for the TIS.

This study has been prepared in accordance with the requirements detailed by the City of Owen Sound Traffic Impact Study Guidelines[1] and MTO Traffic Impact Study Guidelines[2].

[1] City of Owen Sound, *Site Development Engineering Standards*: Appendix H "Scope Traffic Impact Study – Terms of Reference", March 2021.

[2] MTO, "General Guidelines for the Preparation of Traffic Impact Studies", March 2023.

paradigm TRANSPORTATION SOLUTIONS LIMITED

Location of Subject Site

Bruce-Grey CDSB, New School at 16th Street and 28th Avenue, Owen Sound TIS
230607

Figure 1.1

2 Existing Conditions

2.1 Existing Roadways

The main roadways near the subject development considered in assessing the traffic impacts of the development include:

- **16th Street East (Highway 26)** east-west roadway, which is identified as Provincial Highway to the east of 28th Avenue, and a Connecting Link to the west. The signalized intersection at 28th Avenue is under Provincial jurisdiction. The posted speed limit is 80 km/h.
- **28th Avenue East (Grey Road 5)** is a north-south roadway and is classified as a Minor Arterial/County Highway under the jurisdiction of Grey County as Grey Road 5. The posted speed limit is 80 km/h north of 8th Street and 60 km/h to the south.
- **8th Street East (Grey Road 5)** is a continuation of Grey Road 5, on an east-west alignment to the west of the 28th Avenue East that extends south.

Traffic signals are provided at the intersection of 28th Avenue and 16th Street, with exclusive left-turn lanes in all directions with storage lengths of 120 metres for the westbound lane, 70 metres for the eastbound lane, and 55 metres each for the northbound and southbound lanes. An exclusive right-turn lane is provided in eastbound direction only with a storage length of 70 metres.

The intersection of 28th Avenue and 8th Street operates under side-street stop-control.

Figure 2.1 illustrates the traffic control and lane configuration at the study area intersections.

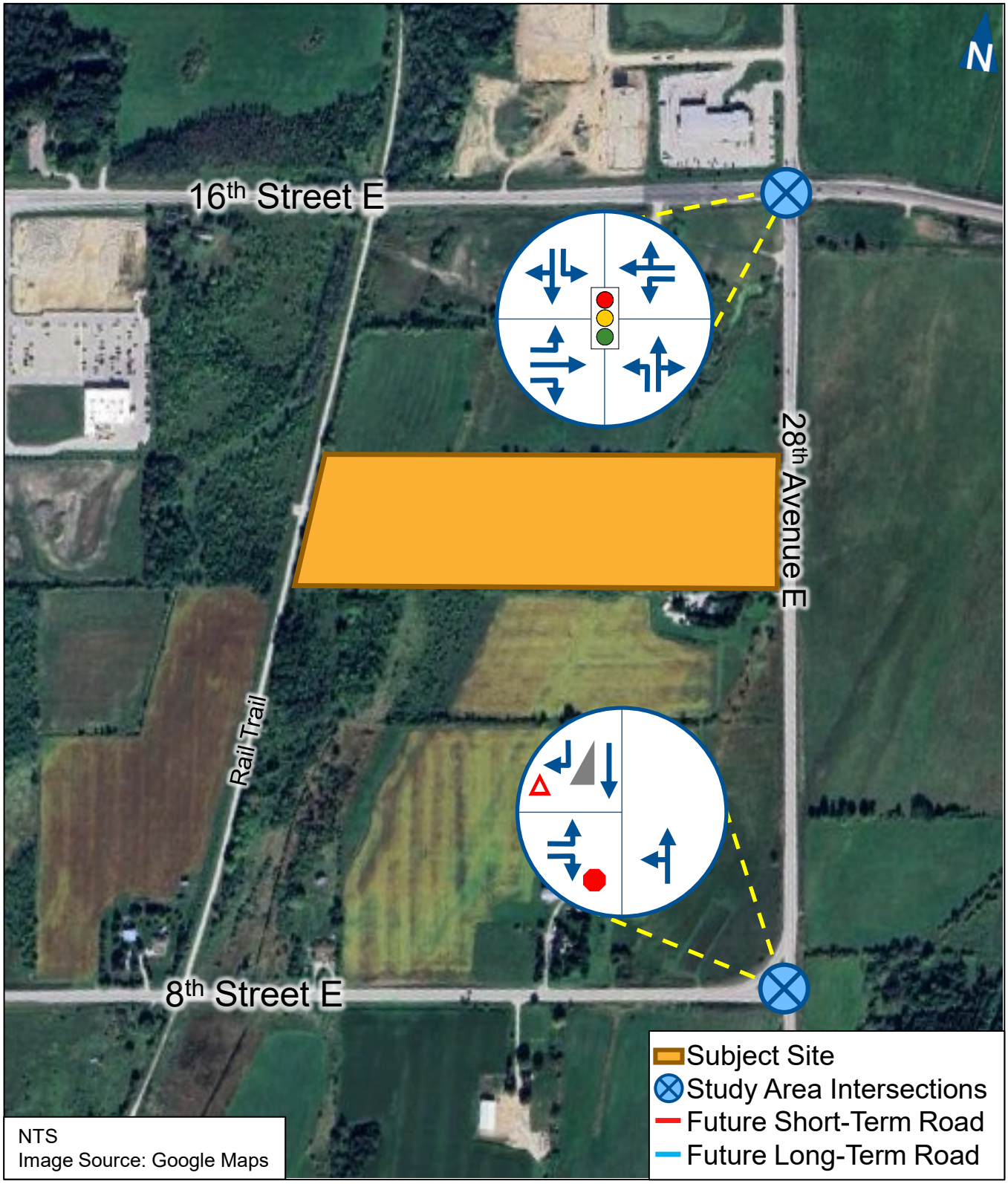

paradigm TRANSPORTATION SOLUTIONS LIMITED

Existing Lane Configuration and Traffic Controls

Bruce-Grey CDSB, New School at 16th Street and 28th Avenue, Owen Sound TIS
230607

Figure 2.1

2.2 Transit Service

There are currently no transit routes provided in proximity of the subject site.

2.3 Traffic Volumes

Paradigm conducted turning movement counts at the intersections of 28th Avenue and 8th Street and at 28th Avenue and 16th Street on 14 November 2023.

Figure 2.2a and **Figure 2.2b** respectively illustrate the existing AM and PM weekday peak hour turning movement traffic volumes. **Table 2.1** summarizes the peak hours at each intersection.

TABLE 2.1: INTERSECTION PEAK HOURS

Intersection	AM Peak Hour	PM Peak Hour
28th Avenue and 8th Street	7:45 – 8:45	4:00 – 5:00
28th Avenue and 16th Street	7:45 – 8:45	4:00 – 5:00

Appendix B contains the detailed traffic counts and signal timings for the study area intersections.

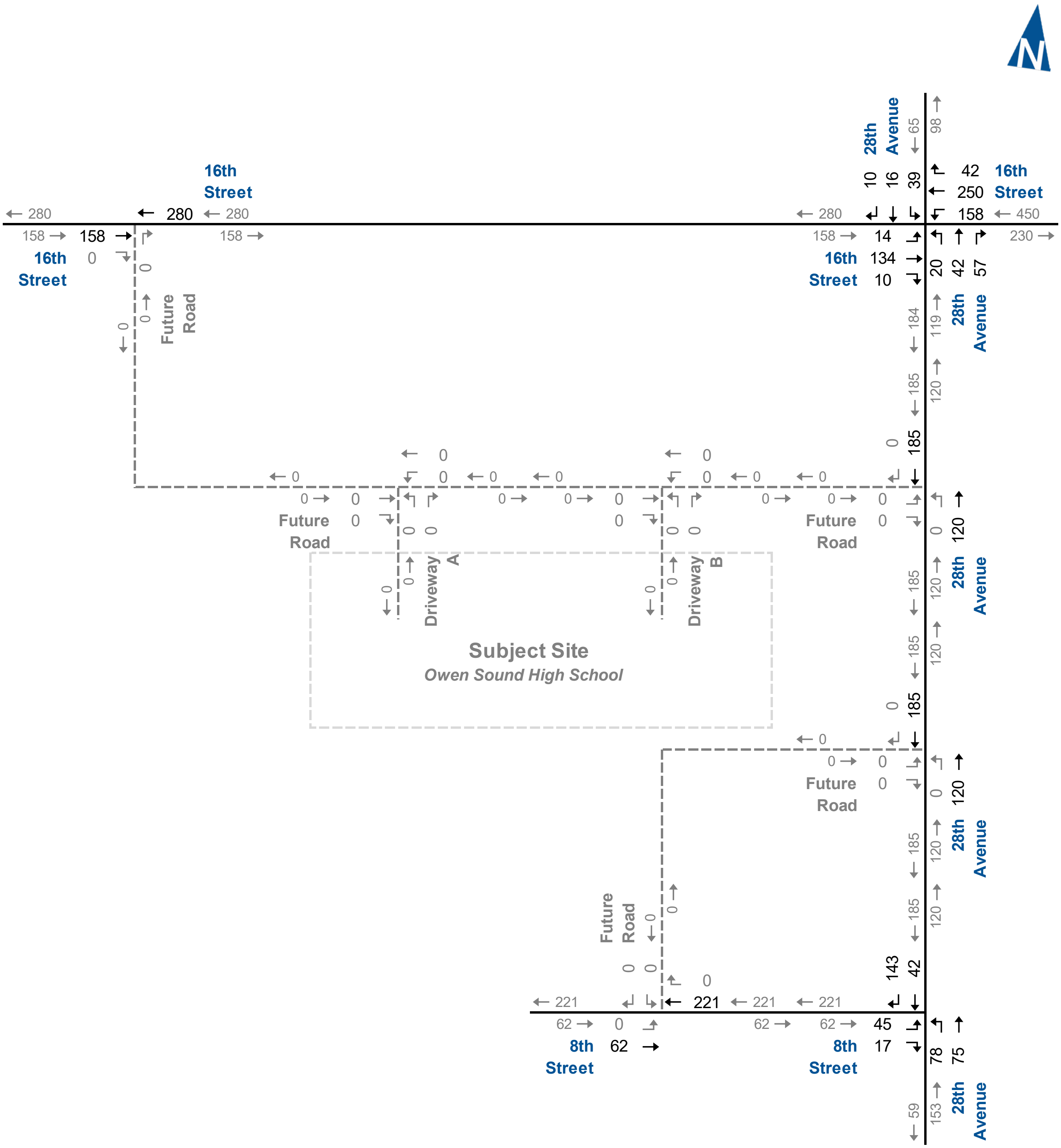

Existing Traffic Volumes AM Peak Hour

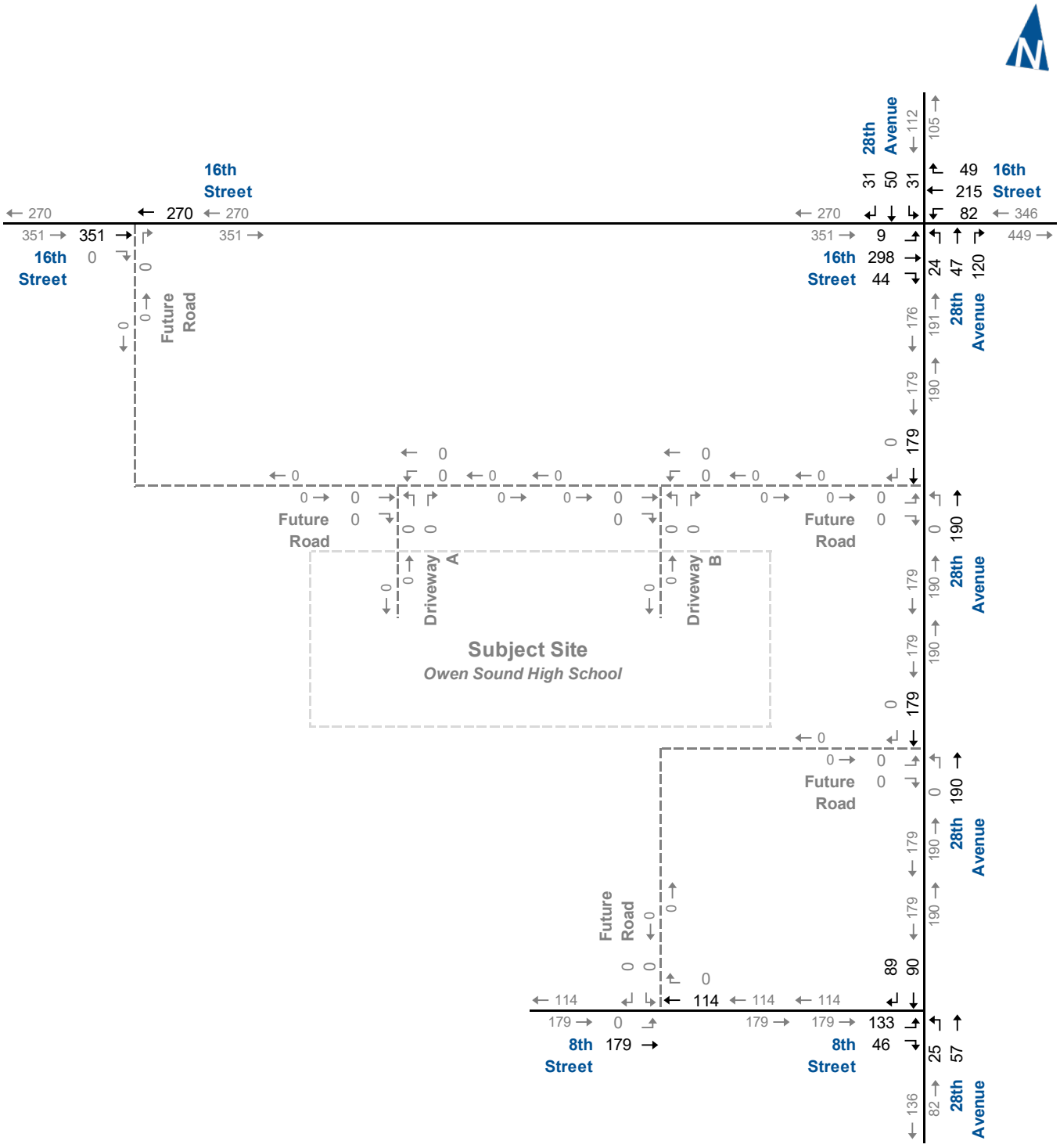

Existing Traffic Volumes PM Peak Hour

Bruce-Grey CDSB, New School at 16th Street and 28th Avenue, Owen Sound TIS
230607

Figure 2.2b

2.4 Traffic Operations

The level of service conditions at the study area intersections have been assessed through intersection operational analysis using Synchro 11.

Intersection level of service (LOS) is a recognized method of quantifying the average delay experienced by drivers at intersections. It is based on the delay experienced by individual vehicles executing the various movements. The delay is related to the number of vehicles intending to make a particular movement, compared to the estimated capacity for that movement. The capacity is based on several criteria related to the opposing traffic flows and intersection geometry.

The highest possible rating is LOS A, under which the average total delay is equal or less than 10.0 seconds per vehicle. When the average delay exceeds 80 seconds for signalized intersections, 50 seconds for unsignalized intersections or when the volume to capacity (v/c) ratio is greater than 1.00, the movement is classed as LOS F and remedial measures are usually implemented if they are feasible. LOS E is usually used as a guideline for the determination of road improvement needs on through lanes, while LOS F may be acceptable for left-turn movements at peak times, depending on delays.

As per MTO guidelines, movements are considered critical under the following conditions for the intersection of 16th Street and 28th Avenue:

- v/c ratios for overall intersection operations, through movements or shared through/turning movements increased to 0.85 or above; or
- v/c ratios for ramp terminal movements increased to 0.75 or above.

Movements are considered critical at the balance of the study area intersections under the following conditions:

- volume/capacity ratios for overall intersection operations, through movements or shared through/turning movements increased to 0.90 or above;
- v/c ratios for exclusive movements that will exceed 1.00;
- 95th percentile queue lengths for individual movements exceed the available lane storage.

Table 2.2 summarizes the results of the intersection operational analysis under existing conditions, including the AM and PM peak hour LOS, v/c ratios, and 95th percentile queues experienced.

The results indicate that the study area intersections are operating at acceptable levels of service, and with no problem movements.

Appendix C contains the detailed Synchro 11 reports.

TABLE 2.2: EXISTING TRAFFIC OPERATIONS

Analysis Period	Intersection	Control Type	MOE	Direction/Movement/Approach																
				Eastbound				Westbound				Northbound				Southbound				Overall
				Left	Through	Right	Approach	Left	Through	Right	Approach	Left	Through	Right	Approach	Left	Through	Right	Approach	
AM Peak Hour	28th Avenue & 16th Street	TCS	LOS	A	A	A	**A**	A	A	>	**A**	B	B	>	**B**	B	B	>	**B**	**A**
			Delay	9	10	9	**10**	6	6	>	**6**	18	18	>	**18**	20	17	>	**19**	**10**
			V/C	0.03	0.20	0.02		0.23	0.32	>		0.06	0.35	>		0.15	0.10	>		
			Q	0	0	0		0	1	>		0	1	>		1	0	>		
			Stor.	70	-	70		120	-	>		55	-	>		55	-	>		
			Avail.	70	-	70		120	-	>		55	-	>		54	-	>		
	28th Avenue & 8th Street	TWSC	LOS	B		A	**B**					<	A		**A**		A	>	**A**	
			Delay	12		9	**11**					<	8		**4**		0	>	**0**	
			V/C	0.08		0.02						<	0.06				0.00	>		
			Q	2		1						<	2				0	>		
			Stor.	-		20						<	-				-	>		
			Avail.	-		19						<	-				-	>		
PM Peak Hour	28th Avenue & 16th Street	TCS	LOS	A	B	A	**B**	A	A	>	**A**	B	C	>	**B**	C	B	>	**B**	**B**
			Delay	9	11	9	**11**	7	7	>	**7**	18	20	>	**20**	22	17	>	**18**	**12**
			V/C	0.02	0.43	0.07		0.16	0.30	>		0.07	0.62	>		0.14	0.25	>		
			Q	0	1	0		0	1	>		0	2	>		1	1	>		
			Stor.	70	-	70		120	-	>		55	-	>		55	-	>		
			Avail.	70	-	70		120	-	>		55	-	>		54	-	>		
	28th Avenue & 8th Street	TWSC	LOS	B		A	**B**					<	A		**A**		A	>	**A**	
			Delay	11		9	**11**					<	7		**2**		0	>	**0**	
			V/C	0.20		0.06						<	0.02				0.00	>		
			Q	6		2						<	1				0	>		
			Stor.	-		20						<	-				-	>		
			Avail.	-		18						<	-				-	>		

MOE - Measure of Effectiveness
LOS - Level of Service
Delay - Average Delay per Vehicle in Seconds
V/C - Volume to Capacity Ratio
Q - 95th Percentile Queue Length (m)
Stor. - Existing Storage (m)
Avail. - Available Storage (m)
TCS - Traffic Control Signal
TWSC - Two-Way Stop Control
< / > - Shared with through movement

2.5 Queue Analysis

In addition to the Synchro 11 analysis, queue length analysis for through and left-turn lanes were carried out at all approaches at the intersection of 16th Street and 28th Avenue.

This method was completed using the MTO Traffic Signal Operating and Timing Policy[3] Table 1 under Level of Service (LOS) A conditions and assuming a vehicle length of 7.5 metres.

In addition, queue length analysis for the eastbound right-turn lane was carried out at the intersection. This was completed using the methodology outlined in the Transportation Association of Canada (TAC) Geometric Design Guide for Canadian Roads[4]. The right-turn queue length is calculated by multiplying the average number of vehicles stored per cycle by 2 for roadways with design speeds greater than 60 km/h.

These methods require the conversion of volumes to Passenger Car Equivalents (PCE) by multiplying the number of heavy vehicles by a conversion factor of 2[5].

Table 2.3a and **Table 2.3b** summarize the results of the queue length analysis under existing traffic conditions. The results indicate that the queue lengths are within the existing storage for all turning movements.

It is noted that according to the MTO queue length method, the northbound through/right-turn queue length reaches 67.5 metres under existing traffic conditions during the PM peak hour. The queue length is not projected to reach the future east-west roadway on 28th Avenue approximately 237 metres south of 16th Street.

---

[3] Traffic Signal Operating and Timing Policy 2010-02, Ministry of Transportation Ontario, June 2016.

[4] Transportation Association of Canada (TAC) Geometric Design Guide for Canadian Roads, 2017.

[5] Canadian Capacity Guide, February 2008.

TABLE 2.3A: EXISTING THROUGH AND LEFT-TURN QUEUE ANALYSIS

Intersection	Horizon	Lane	# of Lanes	Cycle Length (s)		Volumes (vph)		m_u max	Calc'd Length per Lane (m)	Existing Storage (m)
				AM	PM	AM	PM			
28th Avenue & 16th Street	Existing	NBL	1	100	100	22	25	0.7	15.0	55
		NBTR	1			103	175	4.9	67.5	-
		SBL	1			47	33	1.3	22.5	55
		SBTR	1			30	85.0	2.4	37.5	-
		EBL	1			14	10.0	0.4	15.0	70
		EBT	1			141	303.0	8.4	97.5	-
		WBL	1			159	86.0	4.4	60.0	120
		WBTR	1			313	290.0	8.7	105.0	-

TABLE 2.3B: EXISTING RIGHT-TURN QUEUE ANALYSIS

Intersection	Horizon	Movement	Cycle Length (s)		Right Turn Volume (vph)		Average Arrival Rate (vpc)		Calc'd Length (m)		Existing Storage (m)
			AM	PM	AM	PM	AM	PM	AM	PM	
28th Avenue & 16th Street	Existing	EBR	100	100	11	44	0.3	1.2	4.5	18.0	70

3 School Development

3.1 The School Site Plan

The school will include a two-storey building (7,700 m^2, footprint accommodating 12,634 m^2 GFA) located at the easterly end along 28th Avenue East; and an Athletic Field located to the west of the School Building. Two separate driveways are identified on the proposed future road (as noted above) for entrance and exit, along with a Fire Route, Bus Drop Off location, and a parking layout of 143 spaces. The easterly driveway is located approximately 50 metres from the east property line, and the two driveways are separated by 80 metres.

The school will accommodate 1,012 students and 90-95 staff including teachers and custodians.

The new school is expected to be opened for the school year starting in 2028.

Figure 3.1 shows the preliminary site plan.

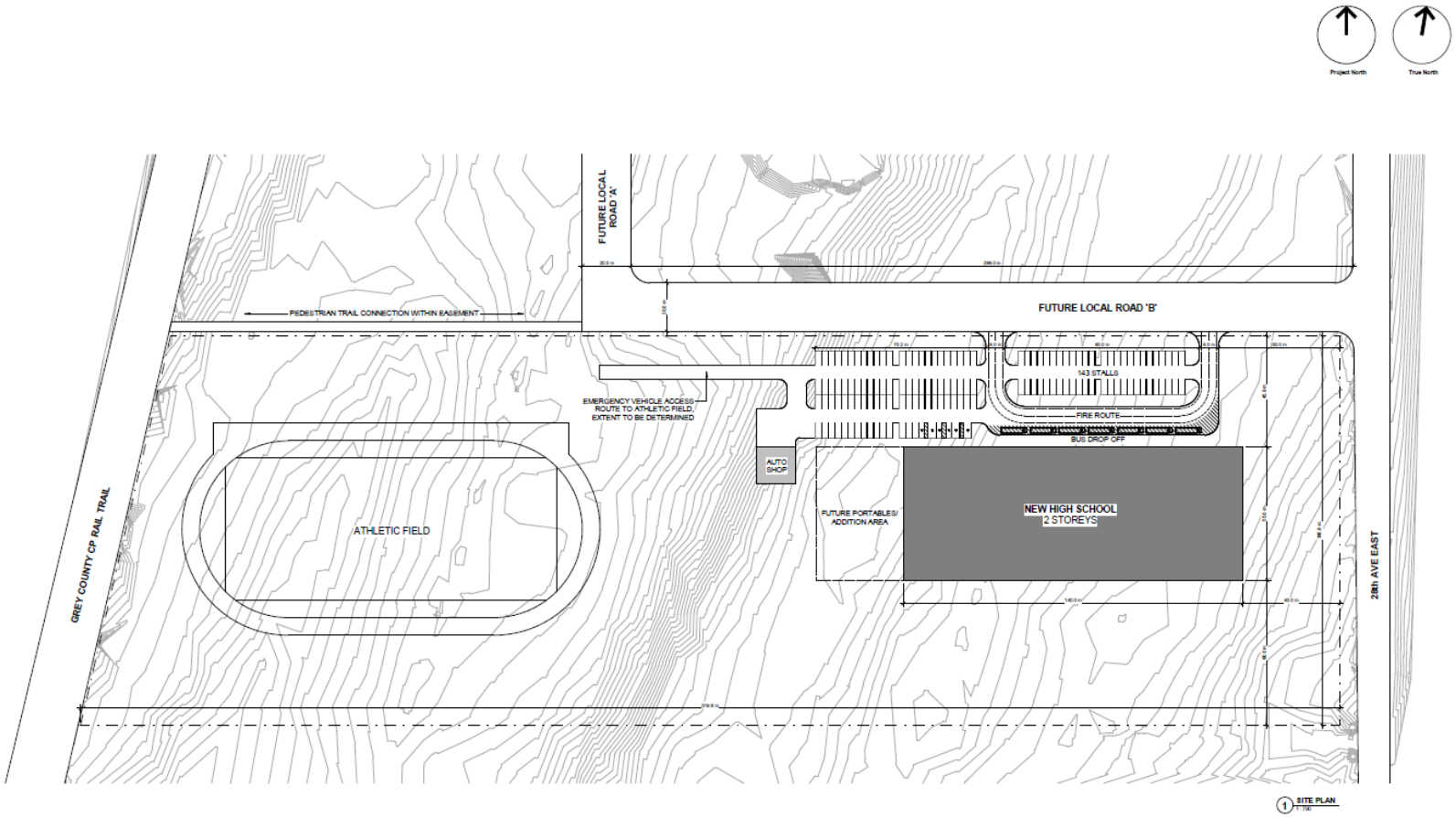

NEW OWEN SOUND HIGH SCHOOL | PRELIMINARY SITE PLAN | 23026 2024-03-19 | SRM architects+ urban+designers

paradigm TRANSPORTATION SOLUTIONS LIMITED

Preliminary Site Plan

Bruce-Grey Catholic District School Board TIA
230607

Figure 3.1

3.2 School Trip Generation

The trip generation for the subject school development was developed on a first principles basis based on information provided by the Bruce-Grey Catholic District School Board (School Board).

The following Home-School travel information for the proposed school was provided by the School Board:

- 1,012 students are expected to attend the new school;
- Approximately 90-95 employees including teachers and support staff will work at the proposed new high school;
- Primary home-school-home student transportation will be provided by 27 school buses; and
- School Hours: 8:00 or 9:00 AM to 3:30 or 4:00 PM.

Based on the above information, the following Trip Generation assumptions are made for estimating subject school traffic:

- All school trips will occur during the road traffic peak hours, viz., 7:45 – 8:45 AM and 4:00 – 5:00 PM.
- All 1,012 students are anticipated to have access to transportation provided by school buses. However, 100 vph AM/PM peak hour trips in each direction (inbound and outbound) are conservatively assumed to account for students who could either be dropped off/picked up by parents or be self-driving.
- The number of employee trips is also conservatively assumed to be 100 vph inbound in the AM and outbound in the PM peak hours; and
- The school bus trips are converted to twice as many passenger car equivalents (PCEs) for operational analysis.

Table 3.1 summarizes the forecast number of net new trips generated by the proposed development.

TABLE 3.1: TRIP GENERATION

Trip Purpose	AM Peak Hour			PM Peak Hour		
	In	Out	Total	In	Out	Total
Student Drop-off	100	100	**200**	100	100	**200**
Employees	100	0	**100**	0	100	**100**
Bus Drop-off (in PCEs)	54	54	**108**	54	54	**108**
Total Trip Generation	**254**	**154**	**408**	**154**	**254**	**408**

3.3 Development Trip Distribution and Assignment

The School Board advised that the buses are expected to arrive in the following directions based on the distribution of the student population:

- 18 buses from the south and west via 8th Street;
- 4 buses from the north via 28th Avenue;
- 2 buses from the south via 28th Avenue;
- 2 buses from the east via 16th Street; and
- 1 bus from the west via 16th Street.

In summary, 20 of the 27 buses will be arriving from the south on 28th Avenue, and seven will be arriving from the north.

The trip distribution for vehicle trips by parents/employees was determined based on the above bus routing information.

Table 3.2 summarizes the breakdown of directional proportions based on the above information.

TABLE 3.2: ESTIMATED TRIP DISTRIBUTION

To/From	Distribution
North via 28th Avenue north of 16th Street	15%
South via 28th Avenue south of 8th Street	15%
16th Street to/from East	10%
16th Street to/from West	5%
8th Street to/from West	55%
Total	**100%**

It is noted that in the opening year for the school (2028), only the east-west section of the future road (north) will be completed with connection to 28th Avenue.

The north-south section with right-in/right-out (RIRO) intersection at 16th Street is assumed to be open by 2033.

School traffic volumes have therefore been assigned corresponding to the above timing the future connections to the north of the school site.

Figure 3.2a and **Figure 3.2b** illustrate the 2028 site-generated traffic volumes for the AM and PM peak hours, respectively, based on the single connection of the future road (north) to 28th Avenue.

Figure 3.3a and **Figure 3.3b** illustrate the 2033 and 2038 site-generated traffic volumes for the AM and PM peak hours, respectively, and correspond to future connections to both 28th Avenue and 16th Street.

It is noted that the school traffic volumes will remain the same for all future horizon years analysed herein.

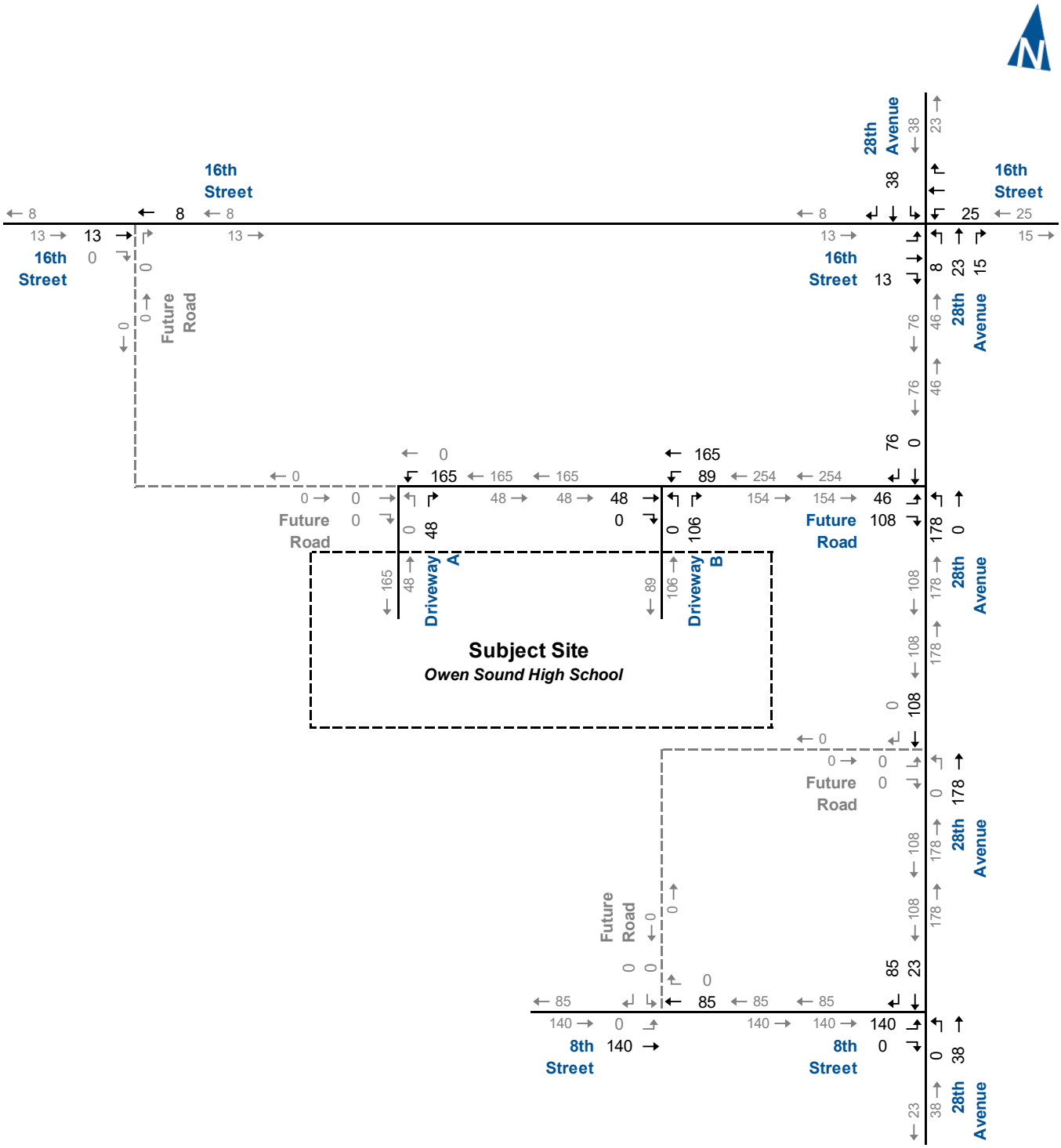

2028 Site-Generated Traffic Volumes AM Peak Hour

Figure 3.2a

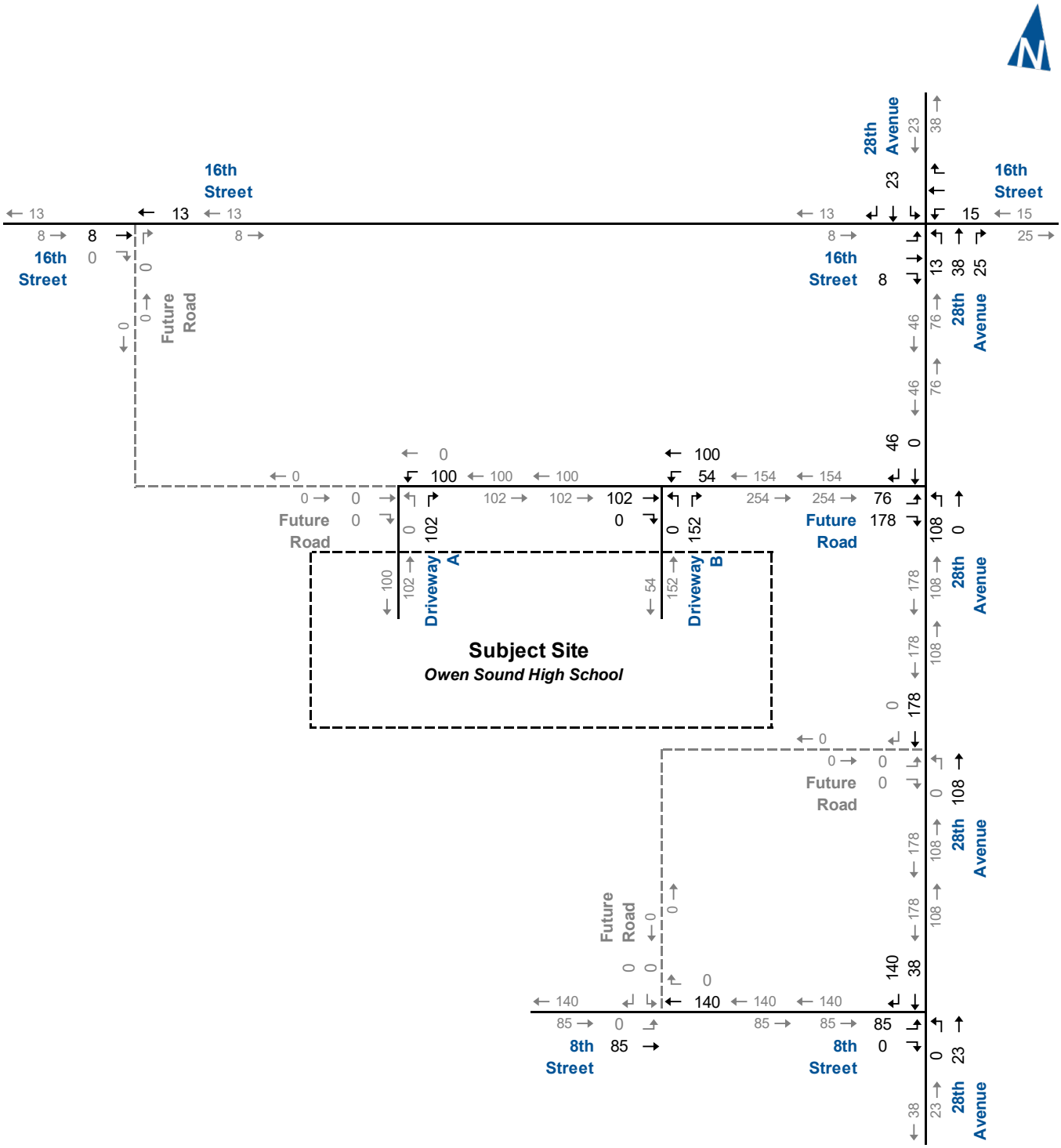

2028 Site-Generated Traffic Volumes PM Peak Hour

Bruce-Grey CDSB, New School at 16th Street and 28th Avenue, Owen Sound TIS
230607

Figure 3.2b

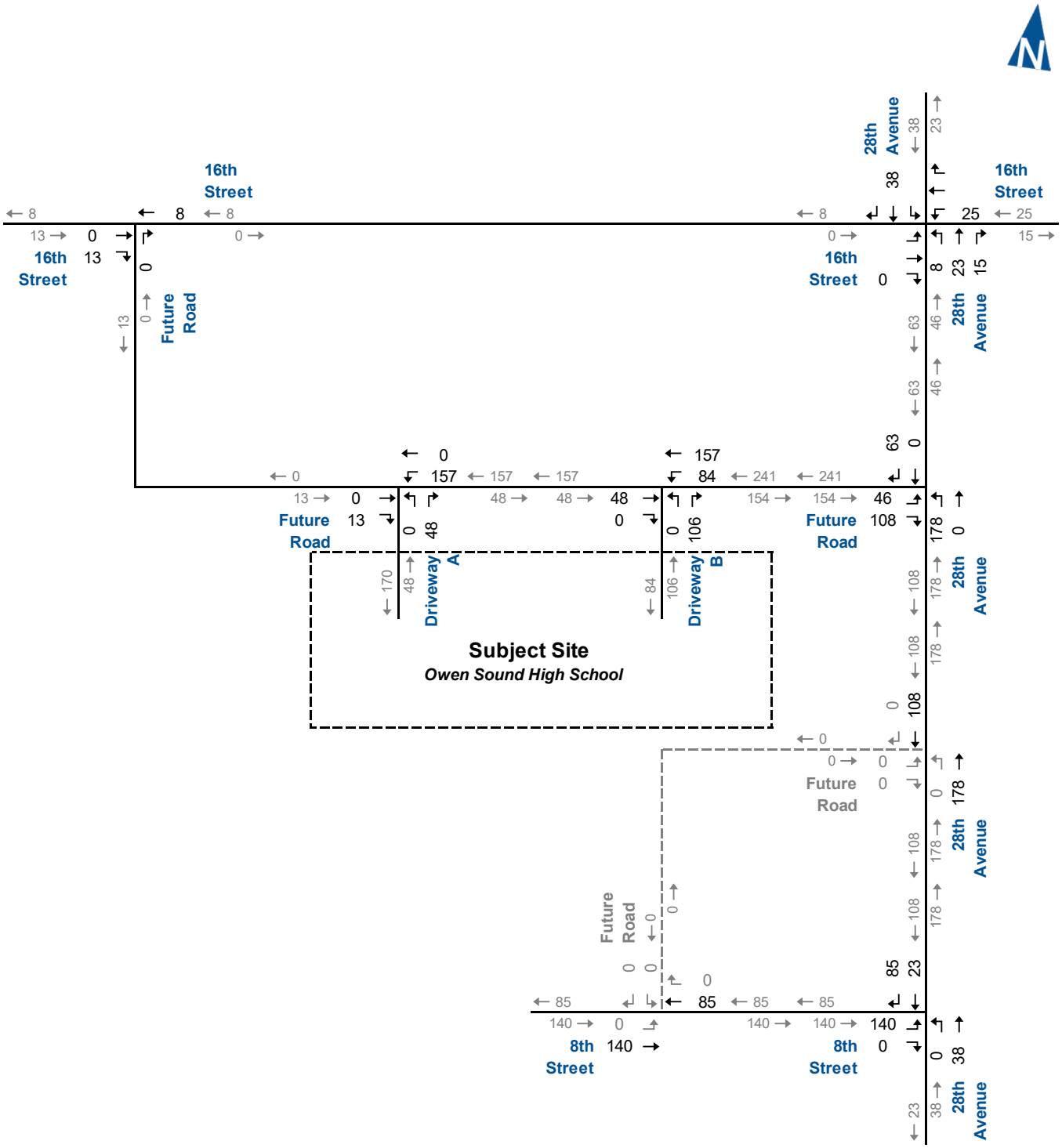

2033 & 2038 Site-Generated Traffic Volumes – AM Peak Hour

Figure 3.3a

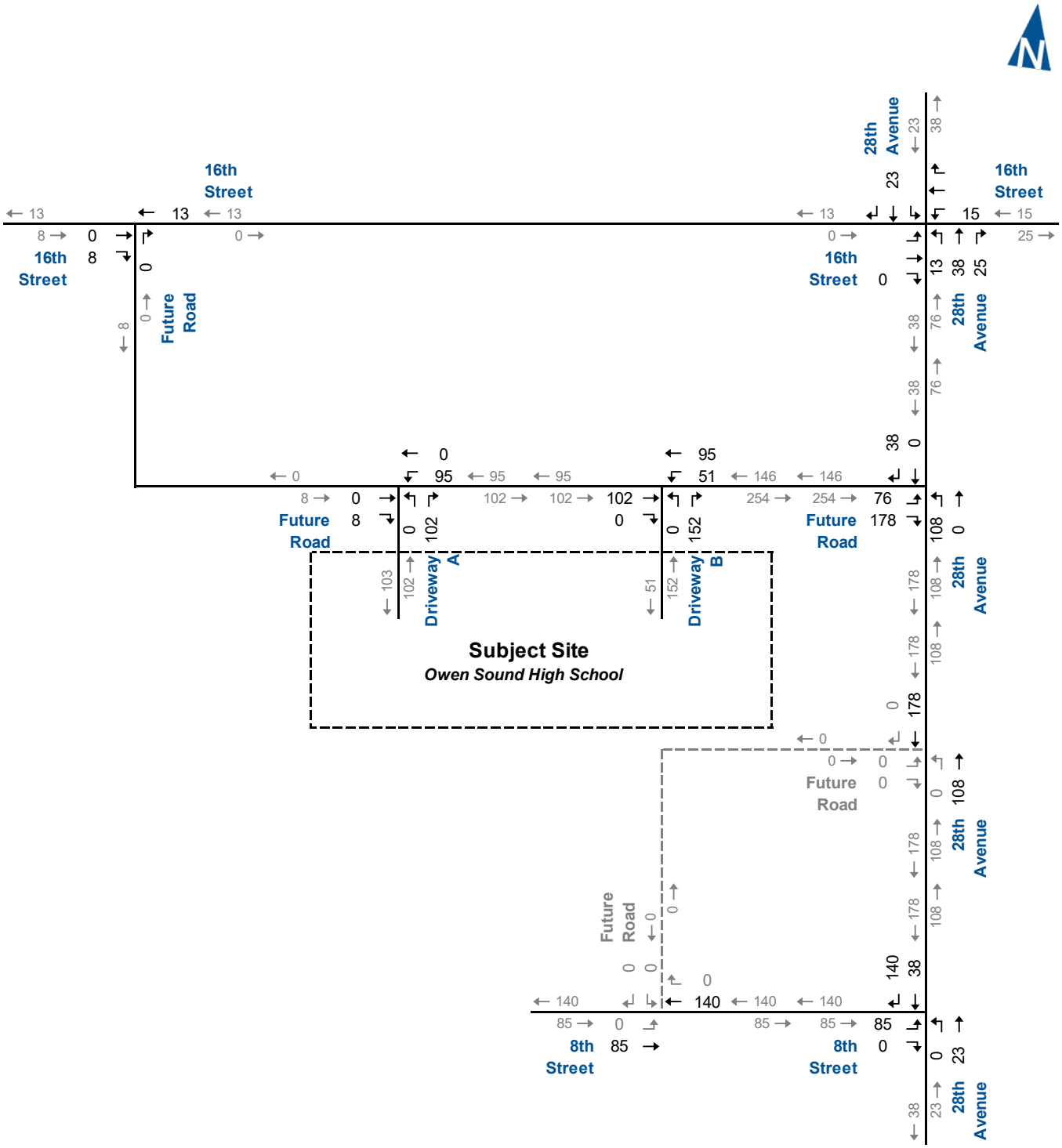

2033 & 2038 Site-Generated Traffic Volumes – PM Peak Hour

Figure 3.3b

4 Evaluation of Future Traffic Conditions

The assessment of future traffic conditions contained in this section includes estimates and analysis of future background and total traffic volumes, as noted below:

- 2028 – School Opening Year:
  - Background Traffic Volumes comprising increases in background road traffic volumes from 2024 to 2028; and development traffic generated by three Other Area Developments.
  - Total Traffic Volumes comprising Background Traffic Volumes and the addition of School Traffic Volumes.
- 2033 – Five Years after School Opening:
  - Background Traffic Volumes comprising increases in background road traffic volumes from 2024 to 2033; development traffic generated by three Other Area Developments; and development traffic generated by 50% of commercial and residential development on the adjacent lands.
  - Total Traffic Volumes comprising 2033 Background Traffic Volumes and the addition of School Traffic Volumes.
- 2038 – Ten years after School Opening:
  - Background Traffic Volumes comprising increases in background road traffic volumes from 2024 to 2038; development traffic generated by three Other Area Developments; and development traffic generated by 100% of commercial and residential development on the adjacent lands.
  - Total Traffic Volumes comprising 2038 Background Traffic Volumes and the addition of School Traffic Volumes.

4.1 Background Traffic Volumes

Background traffic volumes include a background road traffic component and a background development traffic component.

The background road traffic component involves the growth road traffic and is estimated based on a growth rate of 1.0% per annum applied to the existing roadway traffic volumes. This growth rate was also used in Traffic Impact Studies for properties in vicinity to the school site and is appropriate considering the direct addition of future development traffic

from adjacent lands. Background development traffic was estimated based on three other area developments that are anticipated to be in place by 2028, and the future development of adjacent lands north and south of the school site as outlined below.

Figure 4.1 illustrates the location of the three other area developments and the future development lands adjacent to the school site.

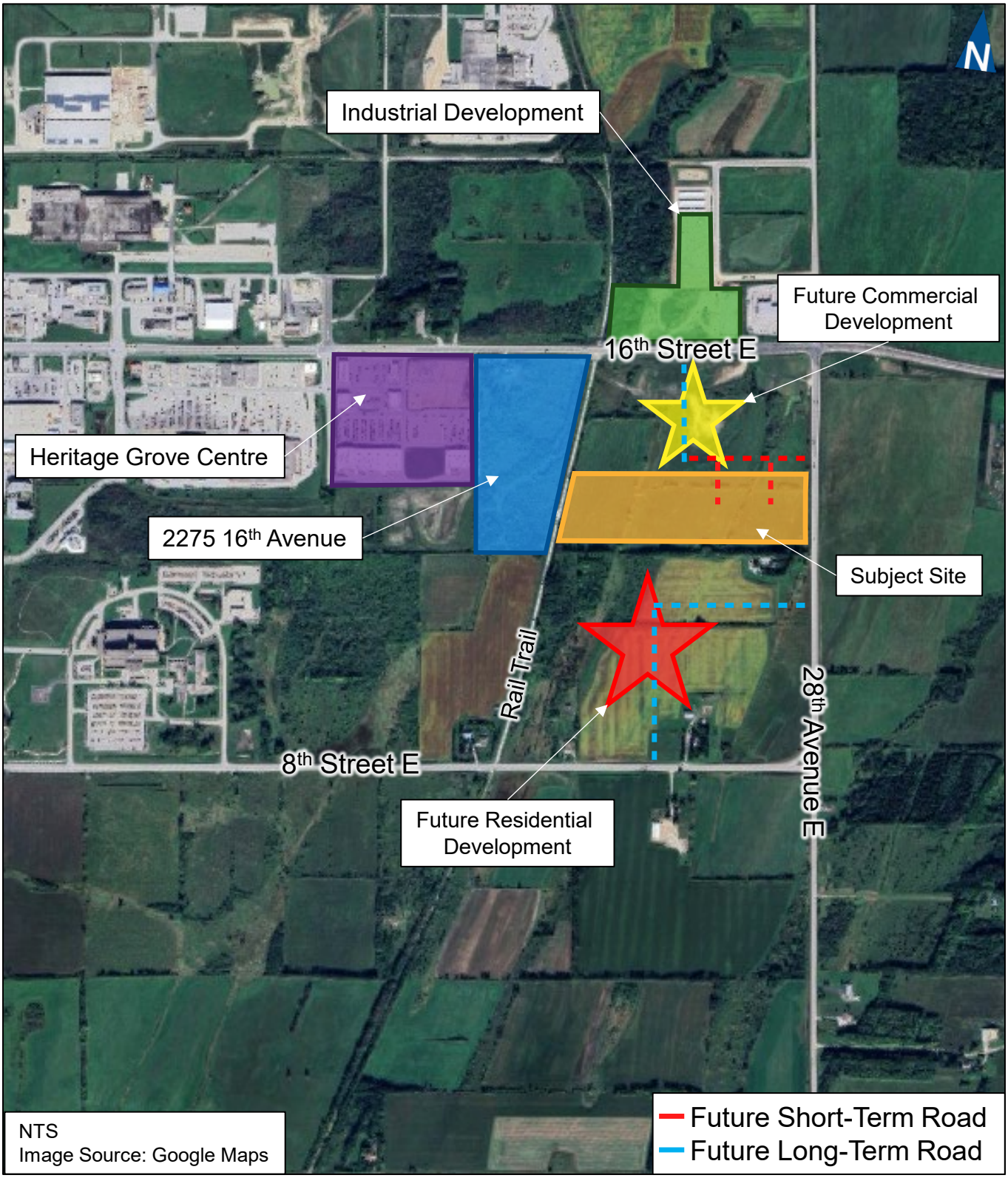

paradigm TRANSPORTATION SOLUTIONS LIMITED

Other Area Development Locations

Figure 4.1

4.2 Other Area Developments

The following other area developments are included in estimating the background traffic volumes based on previous traffic studies for those lands:

- Industrial Development: Located on the west side of 27th Avenue East and south of 17th Street East. The proposed development includes 5,686 m^2 (61,200 sq. ft.) of storage space in ten buildings and 3,426 m^2 (36,900 sq. ft.) of light industrial uses in three buildings. A TIS completed in October 2022[6] indicates that the development is estimated to generate a total of 58 AM and PM peak hour trips.
- 2275 16th Avenue: Located on the south side of 16th Street East immediately east of the existing commercial plaza and west of the Grey County CP Rail Trail. The proposed development includes two commercial buildings totalling 1,200 m^2 (12,917 sq. ft.) GFA, one 500 m^2 (5,382 sq. ft.) GFA commercial-office building, a 311 m^2 (3,348 sq. ft.) GFA restaurant with drive-through, a 300 m^2 (3,229 sq. ft.) GFA restaurant and three apartment buildings accommodating a total of 120 residential units. The development is estimated to generate a total of 238 AM peak hour trips and 158 PM peak hour trips.
- Heritage Grove Centre: Located at 2125 16th Street East, a commercial development located west of the subject site on the south side of 16th Street and east of 20th Avenue. A TIS was completed by Crozier Consulting Engineers (Crozier) in April 2019[7], and a TIS update[8] was prepared by Crozier in December 2022 to reflect changes to the site plan. The Draft Plan has since been updated[9].

  The background development traffic volumes used in this analysis have been updated to account for these changes. The updated background traffic volumes exclude development traffic from portions of the Heritage Grove Centre commercial development that had been completed prior to November 2023 when traffic counts were conducted. The excluded commercial development traffic volumes are captured in the November 2023

---

6 Prepared by Paradigm Transportation Solutions Limited, *16th Street and 28th Avenue East, Owen Sound, ON Transportation Impact Study*, October 2022.

7 Crozier Consulting Engineers, *2125 16th Street East (Heritage Grove) Commercial Development*, April 2019.

8 Crozier Consulting Engineers, *Traffic Opinion Letter 2125 16th Street East (Heritage Grove) Commercial Development City of Owen Sound*, December 2022.

9 KLM Planning Partners Inc., *Planning Justification Report Heritage Grove Centre 2125 16th Street East City of Owen Sound*, March 2023.

traffic counts. **Appendix D** contains the trip generation estimates and updated development plan.

Each of the above developments are assumed to be in place by 2028.

Appendix D contains the traffic volumes for the other area developments during the AM and PM peak hours.

4.3 Adjacent Lands

The lands north and south of the school site are slated to be developed for commercial and residential uses, respectively. These developments will be supported by future local road connections north and south of the school site.

4.3.1 Future Local Roads

North of the school site, a future local road is proposed, comprising an east-west portion that will connect to 28th Avenue East at an all-moves T-intersection, approximately 240 metres south of 16th Street; and a north-south portion that will connect to 16th Street at a restricted Right-in-Right-out (RIRO) intersection, approximately 300 metres west of 28th Avenue.

A similar future local road alignment is proposed for the area south of the school site, comprising an east-west portion and a north-south portion respectively connecting to 28th Avenue East and 8th Street at two all-moves T-intersections.

It is noted that the east-west portion of the local road to the north of the school site, and connecting to 28th Avenue, will be in place by 2028 to accommodate the proposed school driveways.

The north-south portion of the local road to the north and the two segments of the future local road to the south of the school site are assumed to be in place by 2033 to accommodate the development of the adjacent lands.

Figure 4.2 illustrates the future local roads and intersections including proposed traffic controls and lane configurations. It is noted that:

- The lane configuration for the north local road intersection at 28th Avenue includes separate eastbound left-turn (with 30-metre storage) and right-turn lanes; a southbound right-turn lane with 15-metre storage and a separate through lane; and a northbound left-turn lane with 40-metre storage and a separate through lane.

- The lane configuration for the south local road intersection at 28th Avenue, for the 2033 Horizon Year, includes a single shared lane for the eastbound approach; a shared southbound right-turn and through lane; and a shared northbound left-turn and through lane. For the 2038 Horizon Year, the single shared lane for eastbound approach will be modified to include separate left- and right-turn lanes.

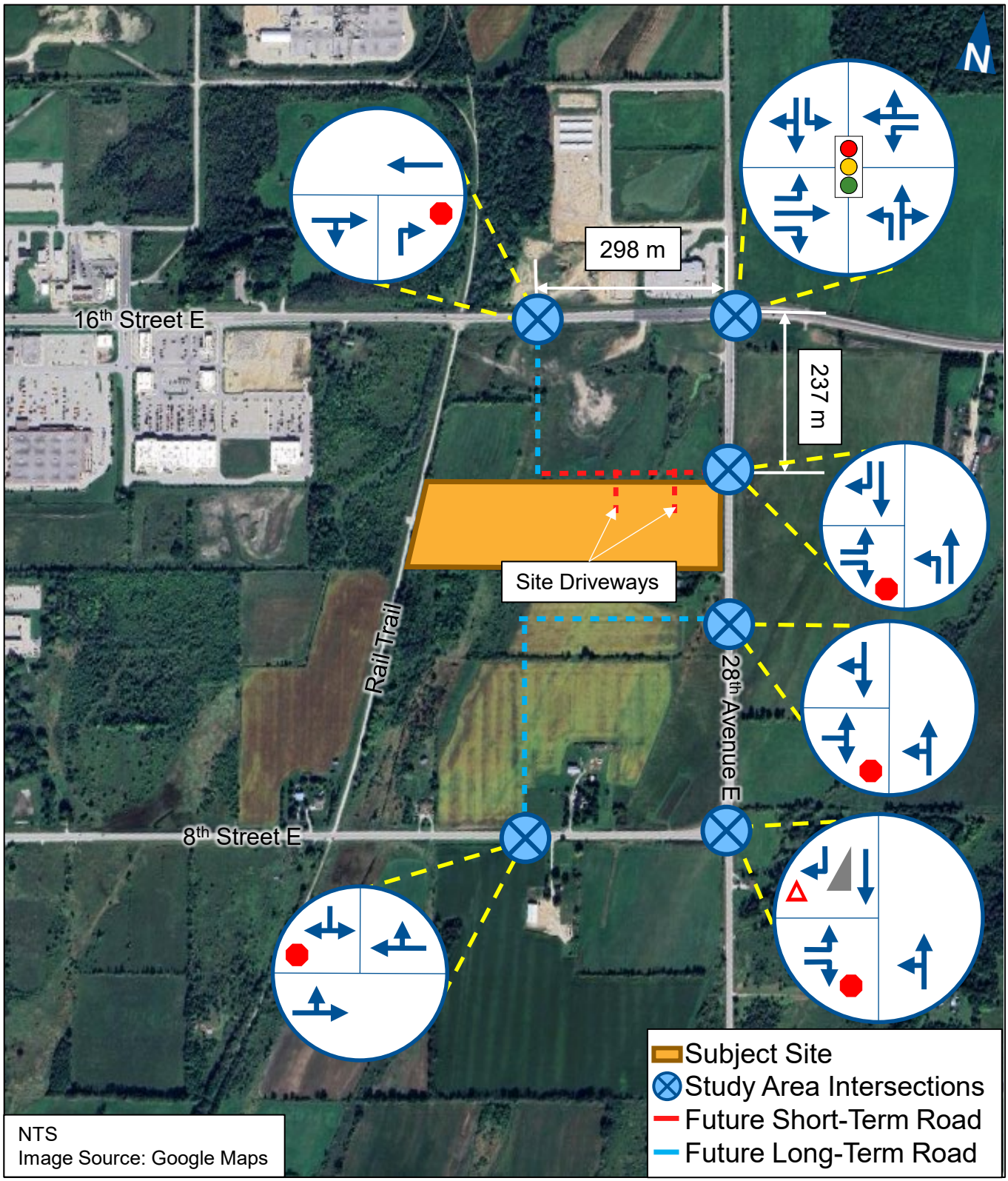

paradigm TRANSPORTATION SOLUTIONS LIMITED

Future Lane Configuration and Traffic Controls

Bruce-Grey CDSB, New School at 16th Street and 28th Avenue, Owen Sound TIS
230607

Figure 4.2

4.3.2 Development Traffic

Trip generation estimates for the development of the adjacent lands are based on the following land use and timing assumptions identified in consultation with the City of Owen Sound:

- Development Statistics:
  - Commercial Development (North): 37,200 m^2 GFA.
  - Residential Development (South): 500 units low density housing, and 200 units medium/high density.
- Development Timing:
  - 2028 – No development on the above two lands.
  - 2033 – 50% of both commercial and residential developments.
  - 2038 – 100% of both commercial and residential developments.

An additional development scenario corresponding to 1,500 residential units by 2038 was also analysed for transportation impact assessment.

The Institute of Transportation Engineers (ITE) Trip Generation Manual[10] equations were used to estimate the trip generation due to development of the adjacent lands to accommodate commercial and residential land uses.

Commercial Lands

The development of the commercial lands will accommodate a maximum of GFA of 37,200 m^2 (400,421 sq. ft.) of commercial uses. ITE Business Park land use classification was used for trip generation estimates.

Table 4.1 summarizes the forecast number of new trips generated by the Commercial Lands.

TABLE 4.1: COMMERCIAL LANDS TRIP GENERATION

Land Use Code	Gross Floor Area	AM Peak Hour				PM Peak Hour			
		Rate	In	Out	Total	Rate	In	Out	Total
770: Business Park	400,421 sq. ft.	Eq	428	76	**504**	Eq	128	366	**494**
Total Trip Generation			**428**	**76**	**504**		**128**	**366**	**494**

LUC 770 | **AM:** Ln(T) = 0.94 Ln(X) + 0.59 | **PM:** Ln(T) = 0.88 Ln(X) + 0.93

[10] Institute of Transportation Engineers, *Trip Generation Manual,* 11th ed., (Washington, DC: ITE, 2021).

The trip distribution was determined based on the existing traffic patterns on 16th Street, 28th Avenue, and 8th Street. **Table 4.2** displays the breakdown of trip distributions used in this study for the Commercial Lands.

TABLE 4.2: COMMERCIAL LANDS ESTIMATED TRIP DISTRIBUTION

To/From	AM Peak Hour		PM Peak Hour	
	Inbound	Outbound	Inbound	Outbound
North via 28th Avenue	15%	5%	5%	15%
South via 28th Avenue	20%	10%	10%	20%
East via 16th Street	35%	30%	30%	35%
West via 16th Street	5%	35%	35%	5%
West via 8th Street	25%	20%	20%	25%
Total Trip Generation	**100%**	**100%**	**100%**	**100%**

It is noted that the Commercial Lands are assumed to 50% built-out by 2033 and fully built-out by 2038.

Residential Lands

The residential development of the lands south of the school is expected to accommodate 200 medium/high-density residential units and 500 low-density residential units.

The ITE Trip Generation Manual equations were used to estimate the trip generation of the expected maximum unit yield for the subject lands.

Table 4.3 summarizes the forecast number of new trips generated by the Residential Lands.

TABLE 4.3: RESIDENTIAL LANDS TRIP GENERATION

Land Use Code	Units	AM Peak Hour				PM Peak Hour			
		Rate	In	Out	Total	Rate	In	Out	Total
210: Single-Family Detached Housing	100	Eq	19	55	**74**	Eq	62	37	**99**
215: Single-Family Attached Housing	400	Eq	51	151	**202**	Eq	139	97	**236**
220: Multifamily Housing (Low-Rise)	200	Eq	20	65	**85**	Eq	67	40	**107**
Total Trip Generation			**90**	**271**	**361**		**268**	**174**	**442**

LUC 210 | **AM:** Ln(T) = 0.91 Ln(X) + 0.12 | **PM:** Ln(T) = 0.94 Ln(X) + 0.27
LUC 215 | **AM:** T = 0.52(X) - 5.70 | **PM:** T = 0.60(X) - 3.93
LUC 220 | **AM:** T = 0.31(X) + 22.85 | **PM:** T = 0.43(X) + 20.55

The residential trip distribution was determined based on the location of the employment areas in Owen Sound, and residential traffic was accordingly assigned to the study area roadways.

Figure 4.3 illustrates the location of the employment zones considered in determining the distribution, including the land area of each zone and its percentage share of the total employment land area.

Table 4.4 summarizes the breakdown of trip distributions corresponding to the proportionate land area of each zone.

TABLE 4.4: RESIDENTIAL LANDS ESTIMATED TRIP DISTRIBUTION

To/From	Distribution
North via 28th Avenue	40%
South via 28th Avenue	5%
East via 16th Street	5%
West via 16th Street	25%
West via 8th Street	25%
Total Trip Generation	**100%**

It is noted that the Residential Lands are assumed to be 50% built-out by 2033 and fully built-out by 2038.

Appendix D contains the traffic volumes for the potential development of the Commercial and Residential Lands adjacent to the subject school site during the AM and PM peak hours.

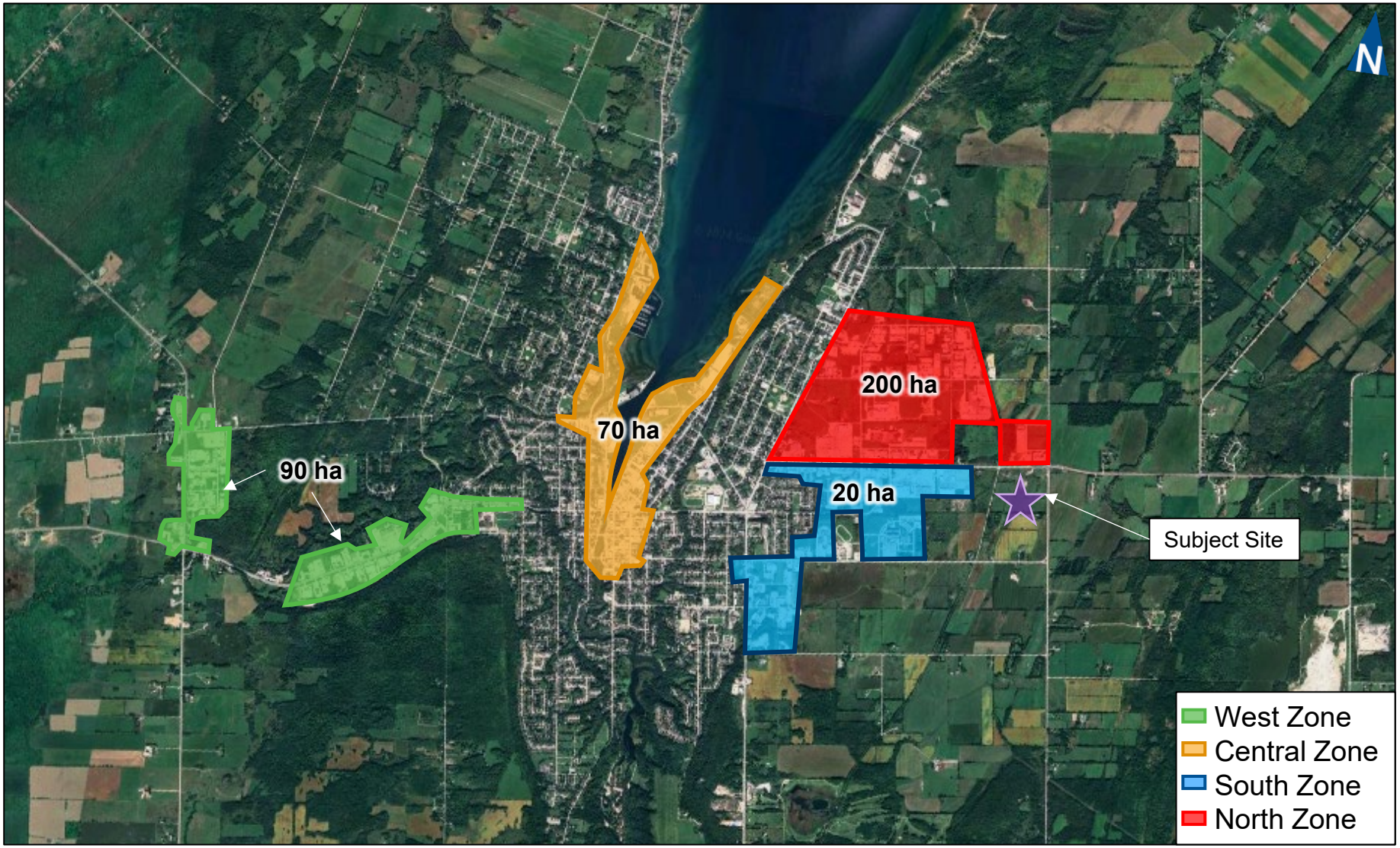

paradigm TRANSPORTATION SOLUTIONS LIMITED

Owen Sound Employment Zones

Figure 4.3

4.4 2028 Traffic Forecasts

The 2028 traffic forecasts reflect the opening year of the subject school development. The background traffic volumes comprise increases in background road traffic volumes and development traffic generated by the three Other Area Developments. The total traffic volumes comprise Background Traffic Volumes and the addition of School Traffic Volumes.

4.4.1 2028 Background Traffic Conditions

Figure 4.4a and **Figure 4.4b** illustrate the 2028 background traffic volumes, including road traffic growth and other area approved development traffic.

The 2028 background traffic volumes have been analyzed using the same methodology as under existing traffic conditions. Signal timings have not been optimized.

Table 4.5 summarizes the results of the 2028 background traffic operations. The results indicate that the study area intersections are forecast to operate at satisfactory levels of service (LOS A/B) during the AM and PM peak hours.

Appendix E contains the supporting detailed Synchro 11 reports.

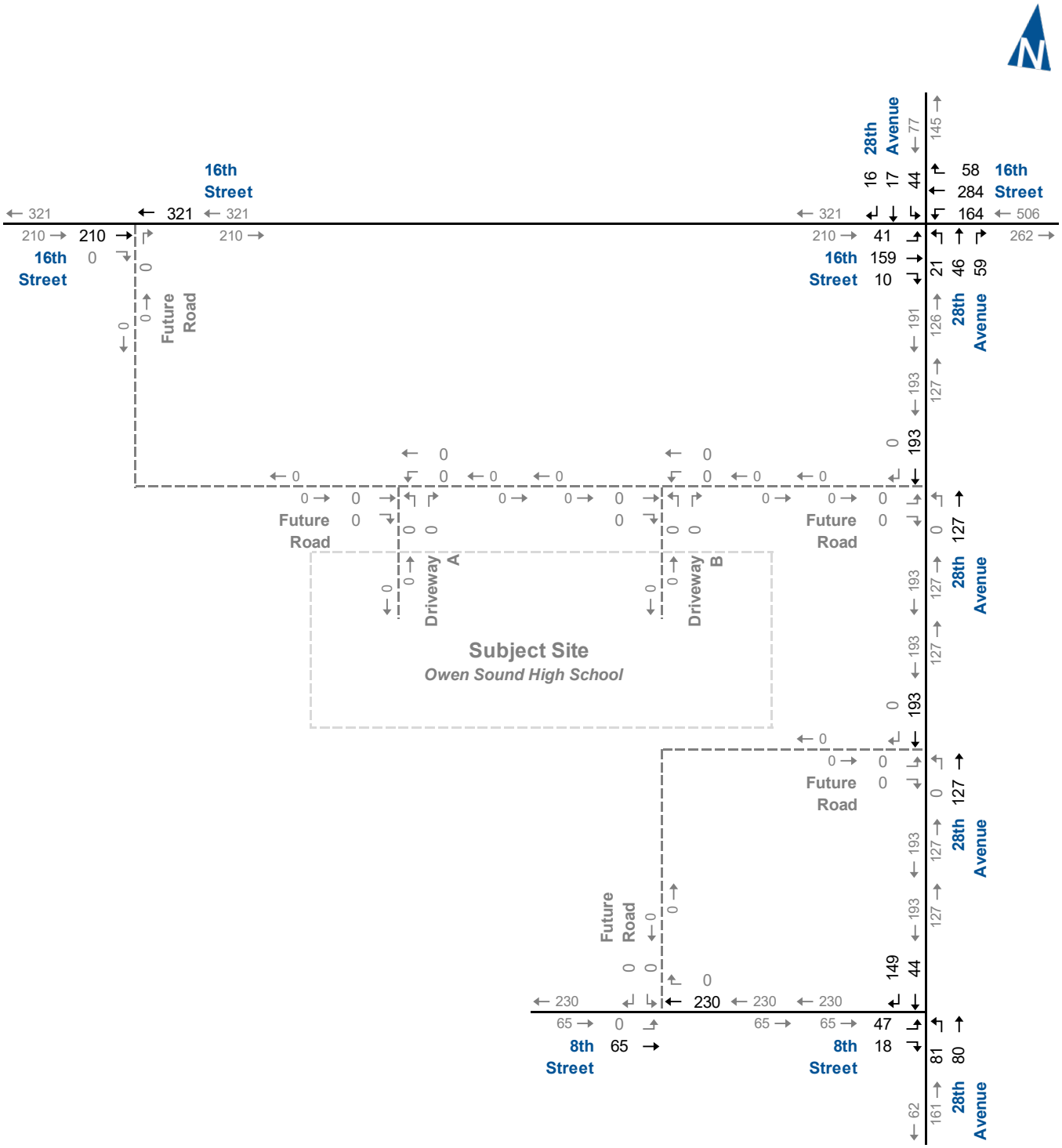

2028 Background Traffic Volumes AM Peak Hour

Figure 4.4a

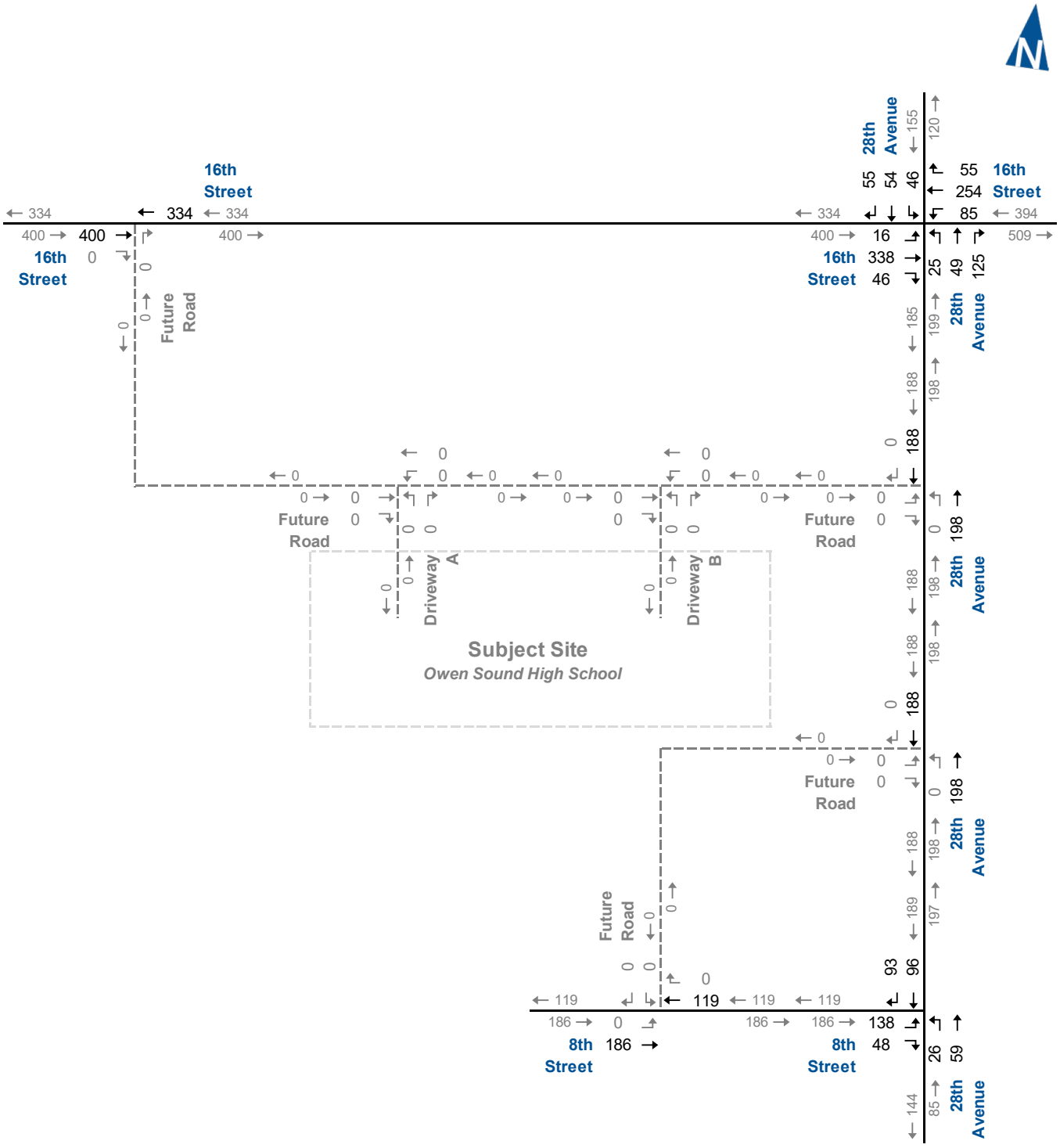

2028 Background Traffic Volumes PM Peak Hour

Bruce-Grey CDSB, New School at 16th Street and 28th Avenue, Owen Sound TIS
230607

Figure 4.4b

TABLE 4.5: 2028 BACKGROUND TRAFFIC OPERATIONS

Analysis Period	Intersection	Control Type	MOE	Direction/Movement/Approach																
				Eastbound				Westbound				Northbound				Southbound				Overall
				Left	Through	Right	Approach	Left	Through	Right	Approach	Left	Through	Right	Approach	Left	Through	Right	Approach	
AM Peak Hour	28th Avenue & 16th Street	TCS	LOS	A	B	A	**B**	A	A	>	**A**	B	B	>	**B**	C	B	>	**B**	**B**
			Delay	10	10	9	**10**	6	7	>	**7**	18	18	>	**18**	20	17	>	**19**	**10**
			V/C	0.08	0.24	0.02		0.25	0.38	>		0.06	0.37	>		0.17	0.12	>		
			Q	0	1	0		0	1	>		0	1	>		1	0	>		
			Stor.	70	-	70		120	-	>		55	-	>		55	-	>		
			Avail.	70	-	70		120	-	>		55	-	>		54	-	>		
	28th Avenue & 8th Street	TWSC	LOS	B		A	**B**					<	A		**A**		A	>	**A**	
			Delay	12		9	**11**					<	8		**4**		0	>	**0**	
			V/C	0.09		0.02						<	0.06				0.00	>		
			Q	2		1						<	2				0	>		
			Stor.	-		20						<	-				-	>		
			Avail.	-		19						<	-				-	>		
PM Peak Hour	28th Avenue & 16th Street	TCS	LOS	A	B	A	**B**	A	A	>	**A**	B	B	>	**B**	C	B	>	**B**	**B**
			Delay	9	12	10	**12**	8	7	>	**7**	18	20	>	**20**	22	17	>	**18**	**13**
			V/C	0.03	0.50	0.08		0.18	0.36	>		0.08	0.60	>		0.20	0.32	>		
			Q	0	2	0		0	1	>		0	2	>		1	1	>		
			Stor.	70	-	70		120	-	>		55	-	>		55	-	>		
			Avail.	70	-	70		120	-	>		55	-	>		54	-	>		
	28th Avenue & 8th Street	TWSC	LOS	B		A	**B**					<	A		**A**		A	>	**A**	
			Delay	12		9	**11**					<	7		**2**		0	>	**0**	
			V/C	0.21		0.06						<	0.02				0.00	>		
			Q	6		2						<	1				0	>		
			Stor.	-		20						<	-				-	>		
			Avail.	-		18						<	-				-	>		

MOE - Measure of Effectiveness
LOS - Level of Service
Delay - Average Delay per Vehicle in Seconds
V/C - Volume to Capacity Ratio
Q - 95th Percentile Queue Length (m)
Stor. - Existing Storage (m)
Avail. - Available Storage (m)
TCS - Traffic Control Signal
TWSC - Two-Way Stop Control
< / > - Shared with through movement

4.4.2 2028 Total Traffic Conditions

Figure 4.5a and **Figure 4.5b** illustrate the 2028 total traffic volumes, including trips generated by the proposed school development.

The 2028 total traffic volumes have been analyzed using the same methodology as under existing and background traffic conditions. Signal timings have not been optimized.

Table 4.6 summarizes the results of the 2028 total traffic operations. The results indicate that the study area intersections are forecast to operate at acceptable levels of service during the AM and PM peak hours.

The Site Driveway intersections on the Future Road (North) are forecast to operate at LOS A during the AM and PM peak hours.

The eastbound (outbound) movement at 28th Avenue and the Future Road (North) is forecast to operate at LOS B/C and with a maximum 95th percentile queue length of seven metres. The queue length is not projected to reach the easterly Site Driveway (Driveway B), which is 50 metres west of 28th Avenue.

Appendix F contains the supporting detailed Synchro 11 reports.

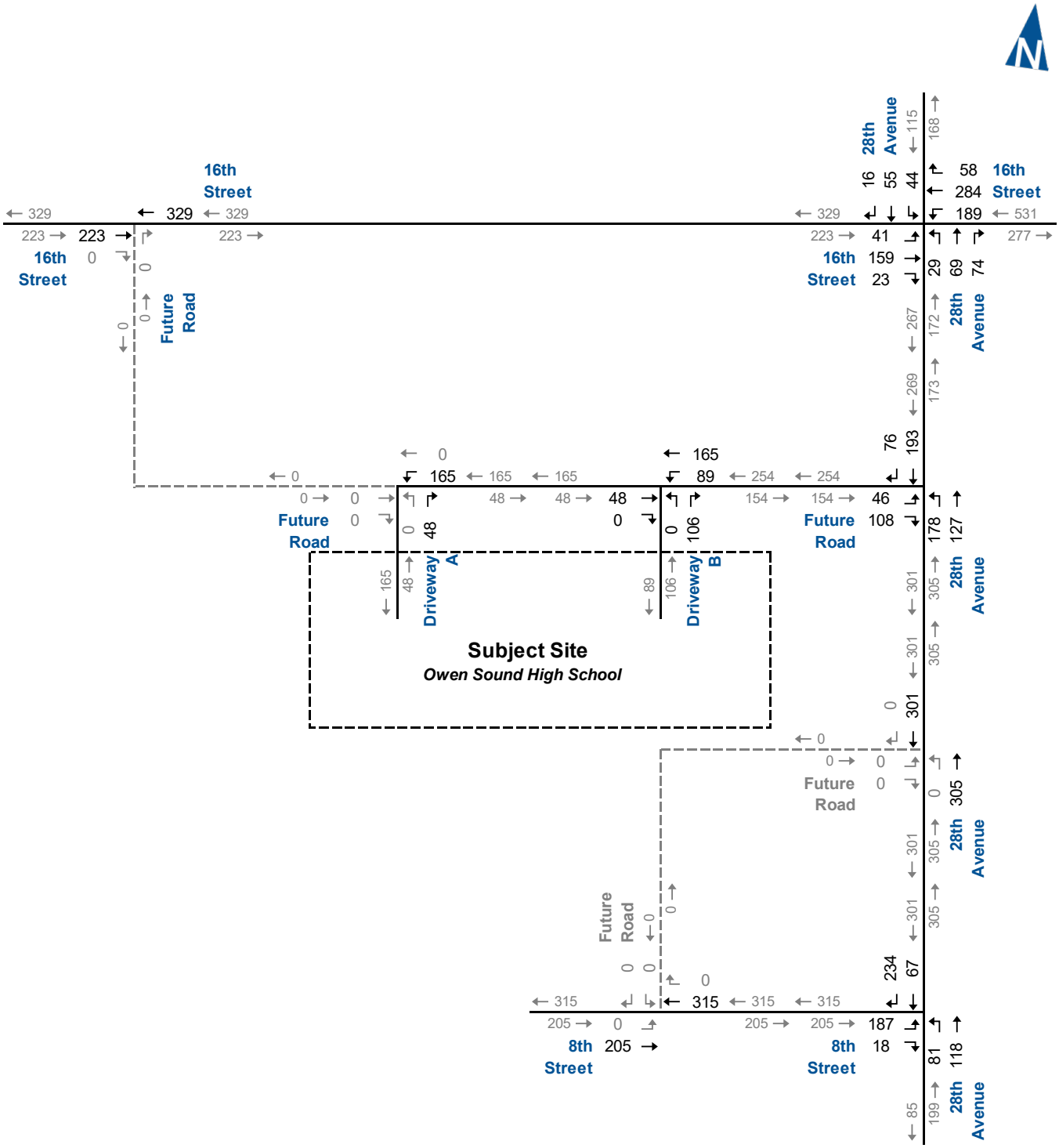

2028 Total Traffic Volumes AM Peak Hour

Bruce-Grey CDSB, New School at 16th Street and 28th Avenue, Owen Sound TIS
230607

Figure 4.5a

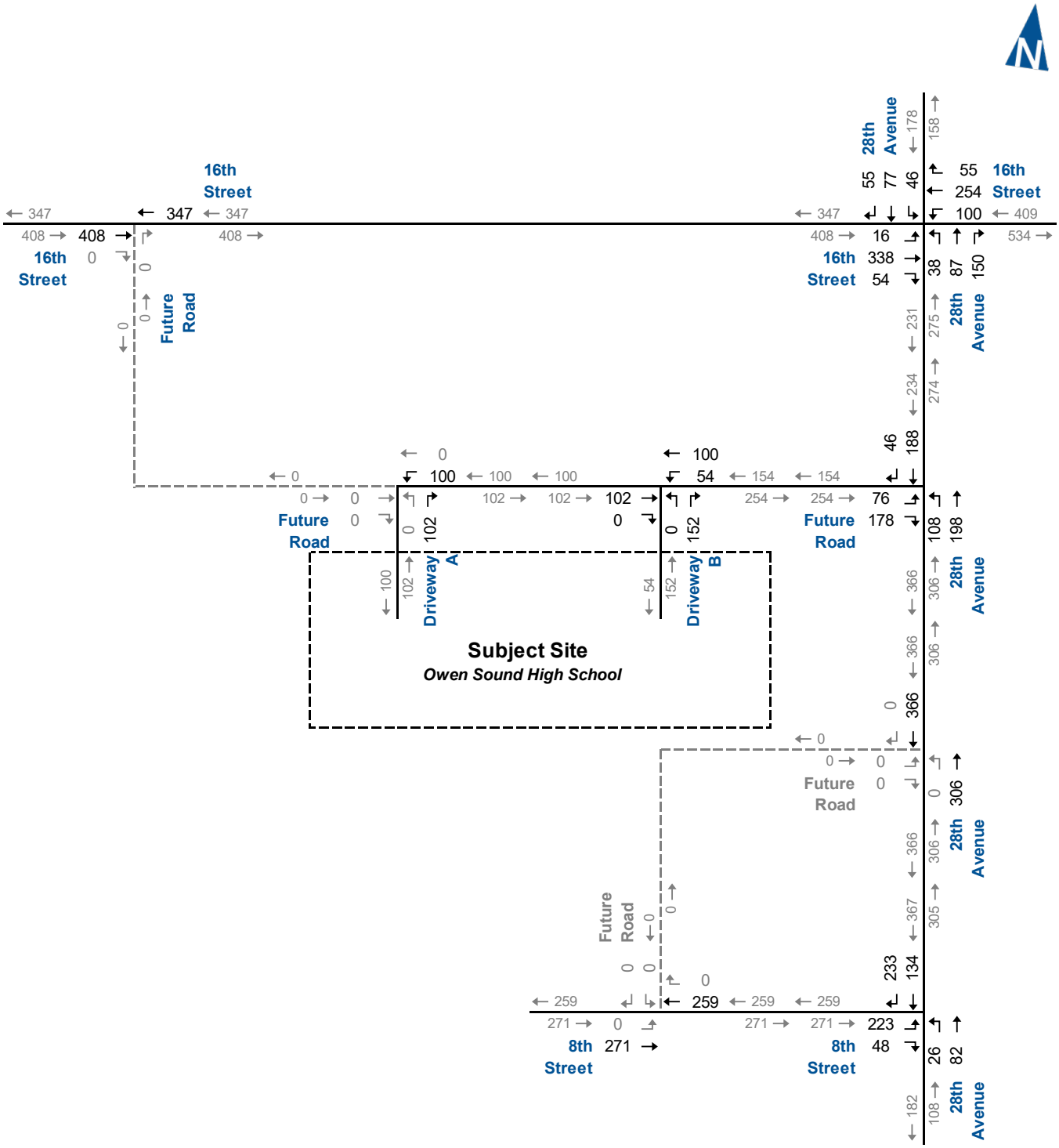

2028 Total Traffic Volumes PM Peak Hour

Bruce-Grey CDSB, New School at 16th Street and 28th Avenue, Owen Sound TIS
230607

Figure 4.5b

TABLE 4.6: 2028 TOTAL TRAFFIC OPERATIONS

Analysis Period	Intersection	Control Type	MOE	Direction/Movement/Approach																
				Eastbound				Westbound				Northbound				Southbound				Overall
				Left	Through	Right	Approach	Left	Through	Right	Approach	Left	Through	Right	Approach	Left	Through	Right	Approach	
AM Peak Hour	28th Avenue & 16th Street	TCS	LOS	A	B	A	**B**	A	A	>	**A**	B	B	>	**B**	C	B	>	**B**	**B**
			Delay	10	11	10	**10**	7	7	>	**7**	19	19	>	**19**	21	18	>	**19**	**11**
			V/C	0.08	0.24	0.04		0.29	0.38	>		0.10	0.49	>		0.19	0.25	>		
			Q	0	1	0		0	1	>		0	1	>		1	1	>		
			Stor.	70	-	70		120	-	>		55	-	>		55	-	>		
			Avail.	70	-	70		120	-	>		55	-	>		54	-	>		
	28th Avenue & Future Road (North)	TWSC	LOS	C		B	**B**					A	A		**A**		A	A	**A**	
			Delay	18		10	**12**					8	0		**5**		0	0	**0**	
			V/C	0.15		0.14						0.15	0.00				0.00	0.00		
			Q	4		4						4	0				0	0		
			Stor.	-		-						40	-				-	15		
			Avail.	-		-						36	-				-	15		
	28th Avenue & 8th Street	TWSC	LOS	C		A	**C**					<	A		**A**		A	>	**A**	
			Delay	17		9	**16**					<	8		**3**		0	>	**0**	
			V/C	0.41		0.02						<	0.06				0.00	>		
			Q	15		1						<	2				0	>		
			Stor.	-		20						<	-				-	>		
			Avail.	-		19						<	-				-	>		
	Driveway A & Future Road (North)	TWSC	LOS		A	>	**A**	<	A		**A**	A		>	**A**					
			Delay		0	>	**0**	<	8		**8**	8		>	**8**					
			V/C		0.00	>		<	0.11			0.05		>						
			Q		0	>		<	3			2		>						
	Driveway B & Future Road (North)	TWSC	LOS		A	>	**A**	<	A		**A**	A		>	**A**					
			Delay		0	>	**0**	<	8		**3**	9		>	**9**					
			V/C		0.00	>		<	0.06			0.11		>						
			Q		0	>		<	2			3		>						
PM Peak Hour	28th Avenue & 16th Street	TCS	LOS	B	B	B	**B**	A	A	>	**A**	B	C	>	**B**	C	B	>	**B**	**B**
			Delay	11	14	11	**14**	9	9	>	**9**	18	20	>	**20**	23	17	>	**18**	**14**
			V/C	0.03	0.53	0.10		0.23	0.38	>		0.11	0.68	>		0.21	0.32	>		
			Q	0	2	0		0	1	>		0	2	>		2	1	>		
			Stor.	70	-	70		120	-	>		55	-	>		55	-	>		
			Avail.	70	-	70		120	-	>		55	-	>		53	-	>		
	28th Avenue & Future Road (North)	TWSC	LOS	C		B	**B**					A	A		**A**		A	A	**A**	
			Delay	16		11	**12**					8	0		**3**		0	0	**0**	
			V/C	0.21		0.23						0.09	0.00				0.00	0.00		
			Q	6		7						2	0				0	0		
			Stor.	-		-						40	-				-	15		
			Avail.	-		-						38	-				-	15		
	28th Avenue & 8th Street	TWSC	LOS	C		A	**B**					<	A		**A**		A	>	**A**	
			Delay	16		10	**14**					<	8		**2**		0	>	**0**	
			V/C	0.42		0.07						<	0.02				0.00	>		
			Q	15		2						<	1				0	>		
			Stor.	-		20						<	-				-	>		
			Avail.	-		18						<	-				-	>		
	Driveway A & Future Road (North)	TWSC	LOS		A	>	**A**	<	A		**A**	A		>	**A**					
			Delay		0	>	**0**	<	7		**7**	9		>	**9**					
			V/C		0.00	>		<	0.07			0.10		>						
			Q		0	>		<	2			2		>						
	Driveway B & Future Road (North)	TWSC	LOS		A	>	**A**	<	A		**A**	A		>	**A**					
			Delay		0	>	**0**	<	8		**3**	10		>	**10**					
			V/C		0.00	>		<	0.04			0.17		>						
			Q		0	>		<	1			4		>						

MOE - Measure of Effectiveness
LOS - Level of Service
Delay - Average Delay per Vehicle in Seconds
V/C - Volume to Capacity Ratio
Q - 95th Percentile Queue Length (m)
Stor. - Existing Storage (m)
Avail. - Available Storage (m)
TCS - Traffic Control Signal
TWSC - Two-Way Stop Control
< / > - Shared with through movement

4.4.3 2028 Queueing Analysis

In addition to the Synchro 11 analysis, queue length analysis for the 2028 background and total traffic conditions were carried out at the intersection of 28th Avenue and 16th Street, the same as under existing traffic conditions.

The queue analysis has been conducted using the same methodology as under existing traffic conditions.

Table 4.7a and **Table 4.7b** summarize the results of the queue length analysis for 2028 background and total traffic conditions. The results indicate that the queue lengths are projected to stay within the existing storage for all turning movements.

It is noted that according to the MTO queue length method, the northbound through/right-turn queue length is projected to reach 90 metres under 2028 total traffic conditions during the PM peak hour. The queue length is not projected to reach the future east-west roadway on 28th Avenue approximately 237 metres south of 16th Street.

TABLE 4.7A: 2028 THROUGH AND LEFT-TURN QUEUE ANALYSIS

Intersection	Horizon	Lane	# of Lanes	Cycle Length (s)		Volumes (vph)		m_u max	Calc'd Length per Lane (m)	Existing Storage (m)
				AM	PM	AM	PM			
28th Avenue & 16th Street	2028 Background	NBL	1	100	100	23	26	0.7	15.0	55
		NBTR	1			109	182	5.1	67.5	-
		SBL	1			53	49	1.5	30.0	55
		SBTR	1			38	116	3.2	45.0	-
		EBL	1			41	18	1.1	22.5	70
		EBT	1			167	343	9.5	112.5	-
		WBL	1			165	89	4.6	60.0	120
		WBTR	1			368	339	10.2	120.0	-
	2028 Total	NBL	1	100	100	32	40	1.1	22.5	55
		NBTR	1			149	252	7.0	90.0	-
		SBL	1			53	49	1.5	30.0	55
		SBTR	1			83	139	3.9	52.5	-
		EBL	1			41	18	1.1	22.5	70
		EBT	1			167	343	9.5	112.5	-
		WBL	1			190	105	5.3	67.5	120
		WBTR	1			368	339	10.2	120.0	-

TABLE 4.7B: 2028 RIGHT-TURN QUEUE ANALYSIS

Intersection	Horizon	Movement	Cycle Length (s)		Right Turn Volume (vph)		Average Arrival Rate (vpc)		Calc'd Length (m)		Existing Storage (m)
			AM	PM	AM	PM	AM	PM	AM	PM	
28th Avenue & 16th Street	2028 Background	EBR	100	100	11	46	0.3	1.3	4.5	19.5	70
	2028 Total	EBR	100	100	25	54	0.7	1.5	10.5	22.5	70

4.5 2033 Traffic Forecasts

The 2033 traffic forecasts reflect five years after the opening year of the subject school development. The background traffic volumes comprise increases in background road traffic volumes; development traffic generated by three Other Area Developments; and development traffic generated by 50% of commercial and residential development on the adjacent lands. The total traffic volumes comprise Background Traffic Volumes and the addition of School Traffic Volumes.

4.5.1 2033 Background Traffic Conditions

Figure 4.6a and **Figure 4.6b** illustrate the 2033 background traffic volumes, including road traffic growth, other area approved development traffic, and the traffic from the lands adjacent to the subject site to be potentially developed. It is noted that the potential Residential and Commercial developments adjacent to the subject site are assumed to be 50% built-out by 2033.

The 2033 background traffic volumes have been analyzed using the same methodology as under existing traffic conditions. Signal timings have not been optimized.

Table 4.8 summarizes the results of the 2033 background traffic operations. The results indicate that the study area intersections are forecast to operate at acceptable levels of service during the AM and PM peak hours.

The eastbound (outbound) movement at 28th Avenue and the Future Road (North) is forecast to operate at LOS C/D and with a maximum 95th percentile queue length of four metres. The projected queue length would not reach the easterly Site Driveway (Driveway B) of the subject school development, 50 metres west of 28th Avenue.

Appendix G contains the supporting detailed Synchro 11 reports.

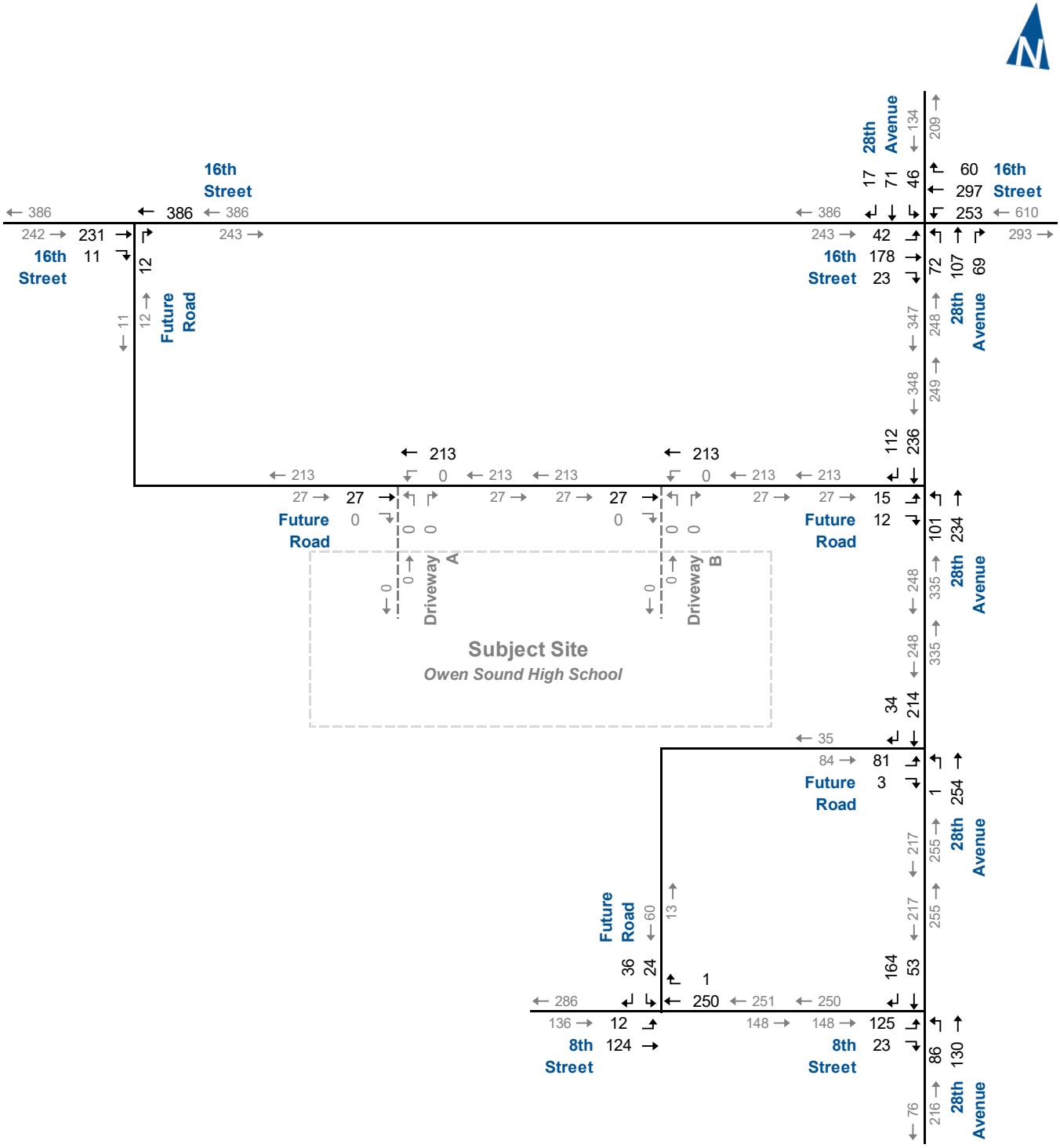

2033 Background Traffic Volumes AM Peak Hour

Bruce-Grey CDSB, New School at 16th Street and 28th Avenue, Owen Sound TIS
230607

Figure 4.6a

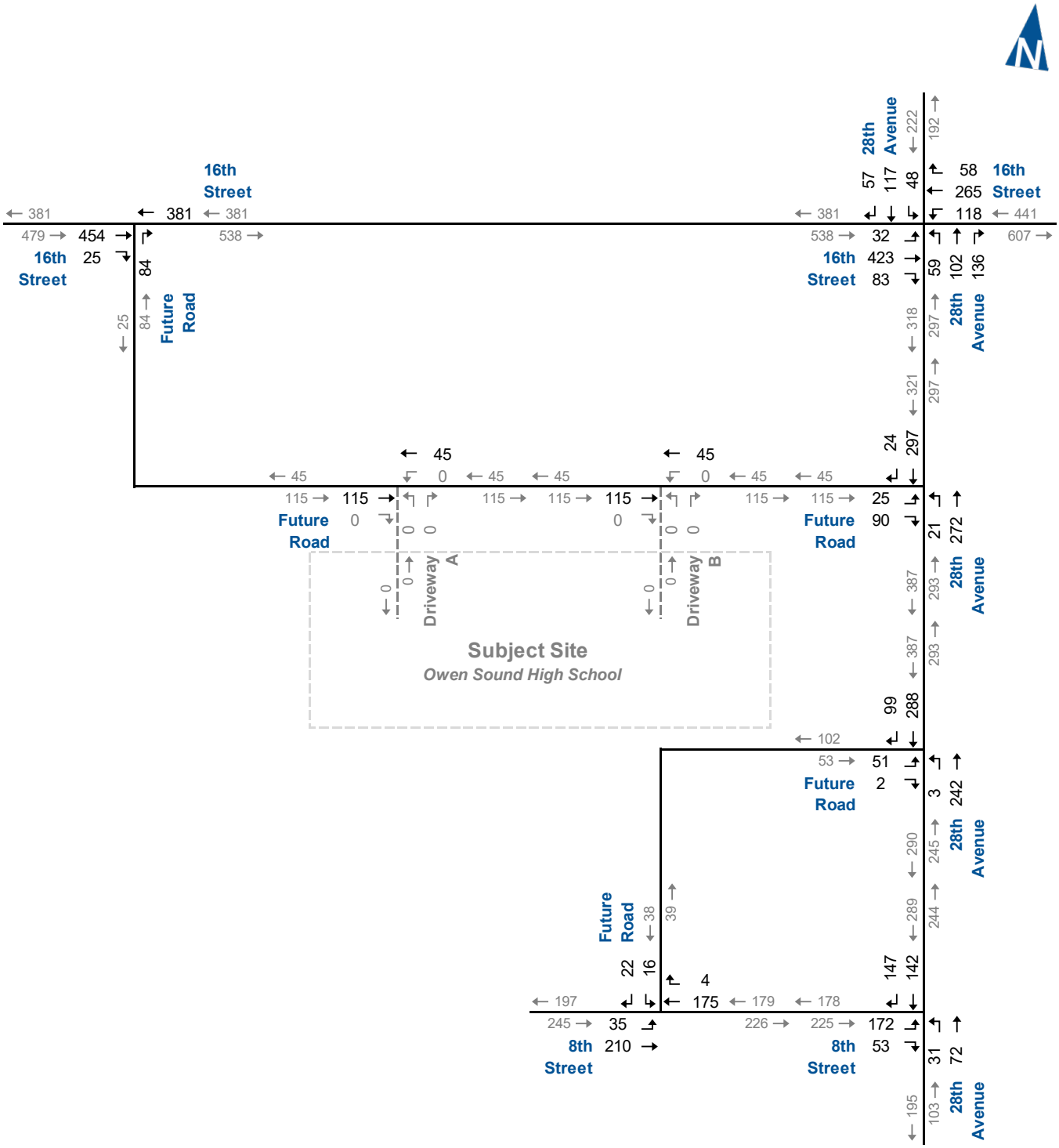

2033 Background Traffic Volumes PM Peak Hour

Bruce-Grey CDSB, New School at 16th Street and 28th Avenue, Owen Sound TIS
230607

Figure 4.6b

TABLE 4.8: 2033 BACKGROUND TRAFFIC OPERATIONS

Analysis Period	Intersection	Control Type	MOE	Direction/Movement/Approach																
				Eastbound				Westbound				Northbound				Southbound				Overall
				Left	Through	Right	Approach	Left	Through	Right	Approach	Left	Through	Right	Approach	Left	Through	Right	Approach	
AM Peak Hour	Future Road & 16th Street	TWSC	LOS		A	>	A		A		A			A	A					
			Delay		0	>	0		0		0			10	10					
			V/C		0.00	>			0.00					0.02						
			Q		0	>			0					1						
	28th Avenue & 16th Street	TCS	LOS	B	B	B	B	A	A	>	A	C	C	>	C	C	B	>	C	B
			Delay	11	12	11	12	7	7	>	7	21	21	>	21	23	19	>	20	12
			V/C	0.09	0.28	0.04		0.39	0.39	>		0.24	0.56	>		0.21	0.30	>		
			Q	0	1	0		0	1	>		1	2	>		2	2	>		
			Stor.	70	-	70		120	-	>		55	-	>		55	-	>		
			Avail.	70	-	70		120	-	>		54	-	>		53	-	>		
	28th Avenue & Future Road (North)	TWSC	LOS	C		A	B					A	A		A		A	A	A	
			Delay	16		10	13					8	0		2		0	0	0	
			V/C	0.05		0.02						0.09	0.00				0.00	0.00		
			Q	1		1						2	0				0	0		
			Stor.	-		-						40	-				-	15		
			Avail.	-		-						38	-				-	15		
	28th Avenue & Future Road (South)	TWSC	LOS	B		>	B					<	A		A		A	>	A	
			Delay	14		>	14					<	8		0		0	>	0	
			V/C	0.18		>						<	0.00				0.00	>		
			Q	4		>						<	0				0	>		
	28th Avenue & 8th Street	TWSC	LOS	B		A	B					<	A		A		A	>	A	
			Delay	14		9	14					<	8		3		0	>	0	
			V/C	0.26		0.03						<	0.06				0.00	>		
			Q	8		1						<	2				0	>		
			Stor.	-		20						<	-				-	>		
			Avail.	-		19						<	-				-	>		
	8th Street & Future Road	TWSC	LOS	<	A		A		A	>	A					B		>	B	
			Delay	<	8		1		0	>	0					11		>	11	
			V/C	<	0.01				0.00	>						0.10		>		
			Q	<	0				0	>						2		>		
PM Peak Hour	Future Road & 16th Street	TWSC	LOS		A	>	A		A		A			B	B					
			Delay		0	>	0		0		0			13	13					
			V/C		0.00	>			0.00					0.17						
			Q		0	>			0					4						
	28th Avenue & 16th Street	TCS	LOS	B	B	B	B	B	A	>	A	C	C	>	C	C	B	>	B	B
			Delay	11	16	12	15	10	9	>	9	21	21	>	21	24	18	>	20	15
			V/C	0.07	0.66	0.15		0.32	0.41	>		0.19	0.67	>		0.22	0.41	>		
			Q	0	3	0		0	1	>		1	2	>		2	2	>		
			Stor.	70	-	70		120	-	>		55	-	>		55	-	>		
			Avail.	70	-	70		120	-	>		54	-	>		53	-	>		
	28th Avenue & Future Road (North)	TWSC	LOS	B		B	B					A	A		A		A	A	A	
			Delay	14		11	12					8	0		1		0	0	0	
			V/C	0.07		0.14						0.02	0.00				0.00	0.00		
			Q	2		4						1	0				0	0		
			Stor.	-		-						40	-				-	15		
			Avail.	-		-						39	-				-	15		
	28th Avenue & Future Road (South)	TWSC	LOS	B		>	B					<	A		A		A	>	A	
			Delay	14		>	14					<	8		0		0	>	0	
			V/C	0.13		>						<	0.00				0.00	>		
			Q	3		>						<	0				0	>		
	28th Avenue & 8th Street	TWSC	LOS	B		A	B					<	A		A		A	>	A	
			Delay	14		10	13					<	8		2		0	>	0	
			V/C	0.31		0.07						<	0.02				0.00	>		
			Q	10		2						<	1				0	>		
			Stor.	-		20						<	-				-	>		
			Avail.	-		18						<	-				-	>		
	8th Street & Future Road	TWSC	LOS	<	A		A		A	>	A					B		>	B	
			Delay	<	8		1		0	>	0					11		>	11	
			V/C	<	0.03				0.00	>						0.06		>		
			Q	<	1				0	>						2		>		

MOE - Measure of Effectiveness
LOS - Level of Service
Delay - Average Delay per Vehicle in Seconds
V/C - Volume to Capacity Ratio
Q - 95th Percentile Queue Length (m)
Stor. - Existing Storage (m)
Avail. - Available Storage (m)
TCS - Traffic Control Signal
TWSC - Two-Way Stop Control
< / > - Shared with through movement

4.5.2 2033 Total Traffic Conditions

Figure 4.7a and **Figure 4.7b** illustrate the 2033 total traffic volumes, including trips generated by the proposed school development.

The results indicate that the study area intersections are forecast to operate at acceptable levels of service during the AM and PM peak hours.

The Site Driveway intersections on the Future Road (North) are forecast to operate at satisfactory levels of service (LOS A/B) during the AM and PM peak hours.

The eastbound (outbound) movement at 28th Avenue and the Future Road (North) is forecast to operate at LOS B/C and with a maximum 95th percentile queue length of 15 metres. The queue length is not projected to reach the easterly Site Driveway (Driveway B), which is 50 metres west of 28th Avenue.

Appendix H contains the supporting detailed Synchro 11 reports.

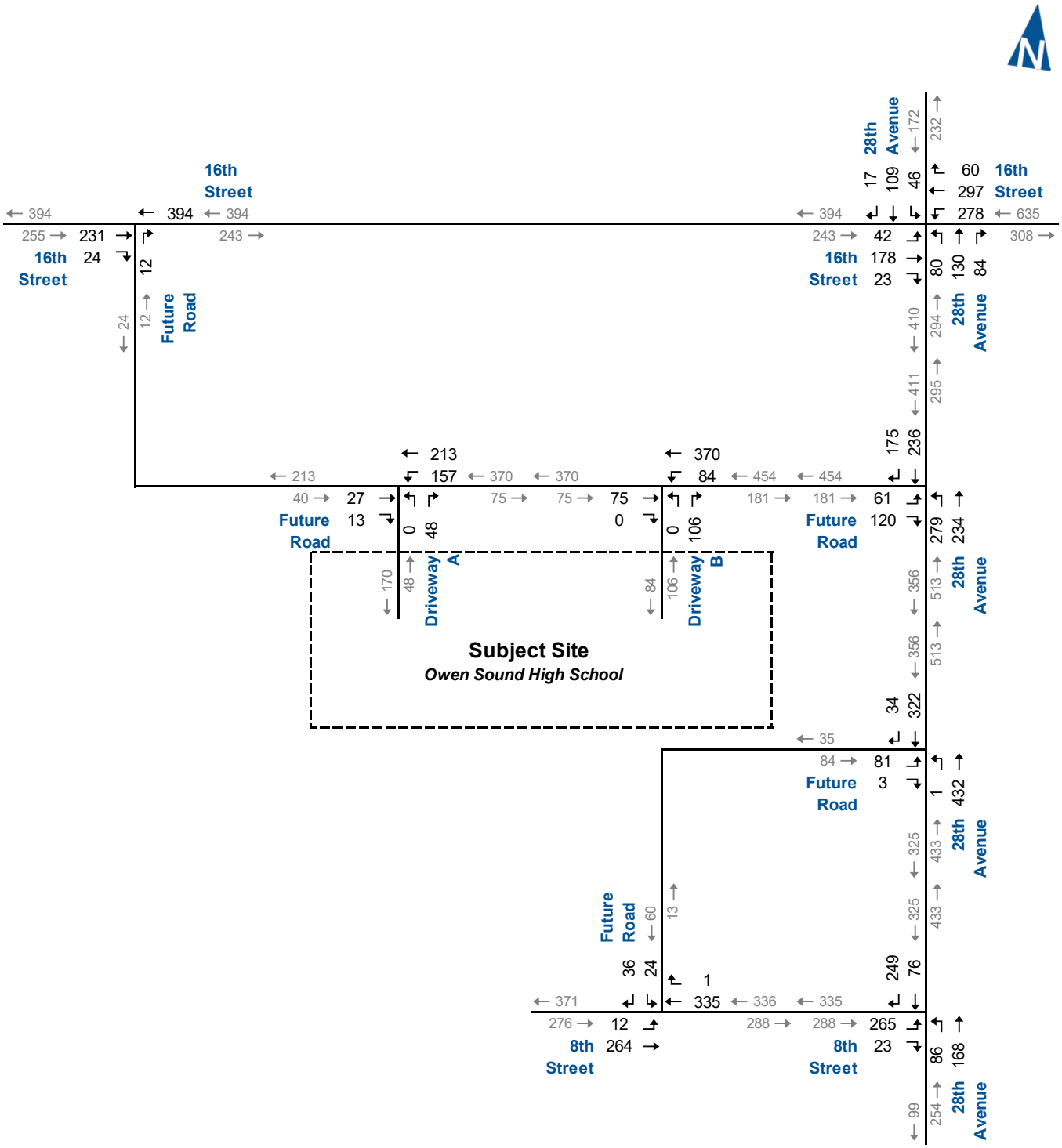

2033 Total Traffic Volumes AM Peak Hour

Bruce-Grey CDSB, New School at 16th Street and 28th Avenue, Owen Sound TIS
230607

Figure 4.7a

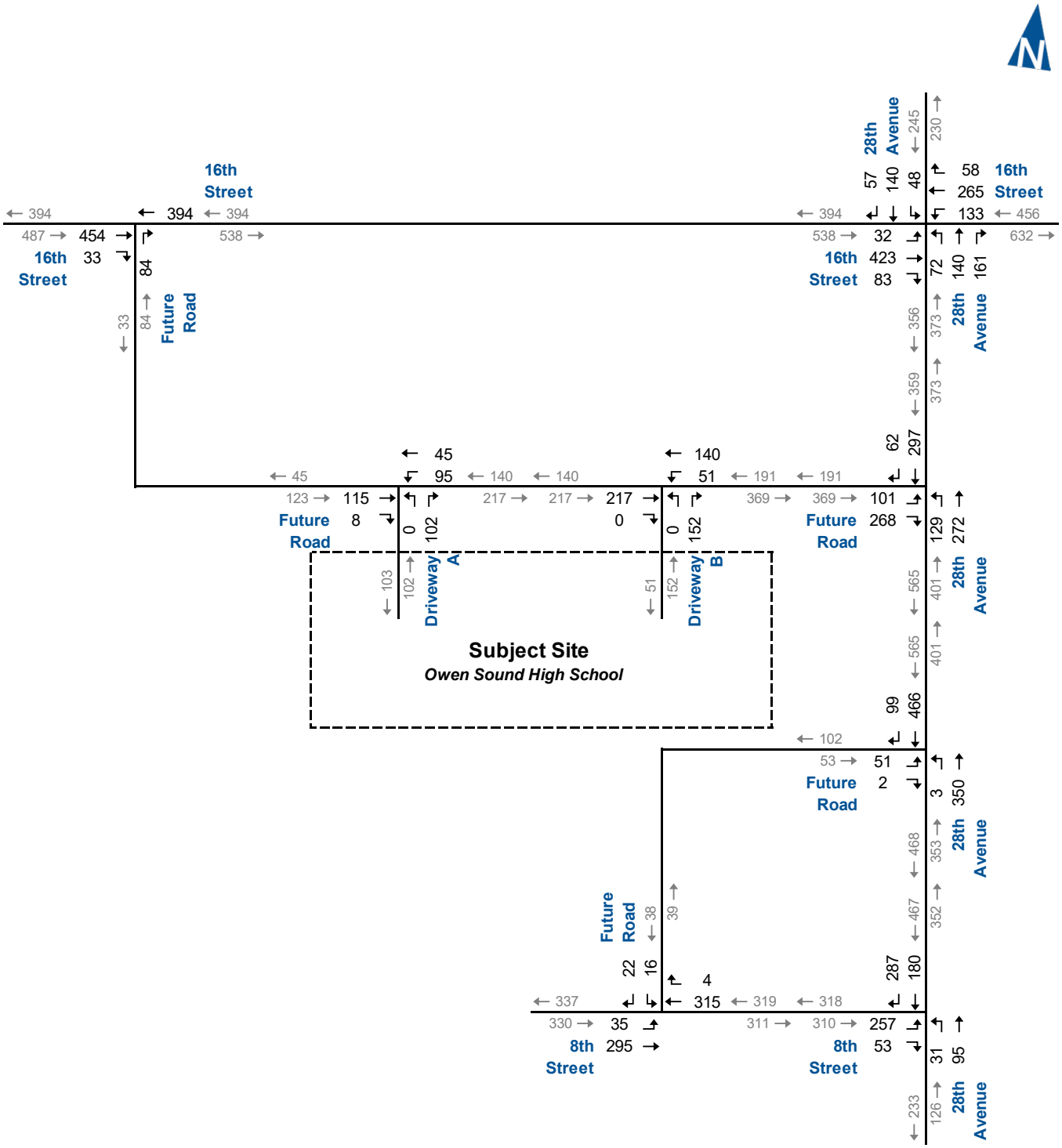

2033 Total Traffic Volumes PM Peak Hour

Bruce-Grey CDSB, New School at 16th Street and 28th Avenue, Owen Sound TIS
230607

Figure 4.7b

TABLE 4.9A: 2033 TOTAL TRAFFIC OPERATIONS – AM PEAK HOUR

Analysis Period	Intersection	Control Type	MOE	Direction/Movement/Approach																
				Eastbound				Westbound				Northbound				Southbound				Overall
				Left	Through	Right	Approach	Left	Through	Right	Approach	Left	Through	Right	Approach	Left	Through	Right	Approach	
AM Peak Hour	Future Road & 16th Street	TWSC	LOS		A	>	**A**		A		**A**			A	**A**					
			Delay		0	>	**0**		0		**0**			10	**10**					
			V/C		0.00	>			0.00					0.02						
			Q		0	>			0					1						
	28th Avenue & 16th Street	TCS	LOS	B	B	B	**B**	A	A	>	**A**	C	C	>	**C**	C	A	>	**C**	**B**
			Delay	12	14	12	**13**	8	8	>	**8**	22	21	>	**21**	24	0	>	**20**	**14**
			V/C	0.09	0.30	0.05		0.44	0.40	>		0.28	0.61	>		0.22	0.00	>		
			Q	0	1	0		0	1	>		2	3	>		2	0	>		
			Stor.	70	-	70		120	-	>		55	-	>		55	-	>		
			Avail.	70	-	70		120	-	>		53	-	>		53	-	>		
	28th Avenue & Future Road (North)	TWSC	LOS	E		B	**C**					A	A		**A**		A	A	**A**	
			Delay	40		10	**20**					9	0		**5**		0	0	**0**	
			V/C	0.40		0.17						0.27	0.00				0.00	0.00		
			Q	13		4						8	0				0	0		
			Stor.	-		-						40	-				-	15		
			Avail.	-		-						32	-				-	15		
	28th Avenue & Future Road (South)	TWSC	LOS	C		>	**C**					<	A		**A**		A	>	**A**	
			Delay	19		>	**19**					<	8		**0**		0	>	**0**	
			V/C	0.27		>						<	0.00				0.00	>		
			Q	8		>						<	0				0	>		
	28th Avenue & 8th Street	TWSC	LOS	D		A	**D**					<	A		**A**		A	>	**A**	
			Delay	27		10	**26**					<	8		**3**		0	>	**0**	
			V/C	0.65		0.03						<	0.06				0.00	>		
			Q	34		1						<	2				0	>		
			Stor.	-		20						<	-				-	>		
			Avail.	-		19						<	-				-	>		
	8th Street & Future Road	TWSC	LOS	<	A		**A**		A	>	**A**					B		>	**B**	
			Delay	<	8		**0**		0	>	**0**					13		>	**13**	
			V/C	<	0.01				0.00	>						0.12		>		
			Q	<	0				0	>						3		>		
	Driveway A & Future Road (North)	TWSC	LOS		A	>	**A**	<	A		**A**	A		>	**A**					
			Delay		0	>	**0**	<	8		**3**	9		>	**9**					
			V/C		0.00	>		<	0.11			0.06		>						
			Q		0	>		<	3			2		>						
	Driveway B & Future Road (North)	TWSC	LOS		A	>	**A**	<	A		**A**	A		>	**A**					
			Delay		0	>	**0**	<	8		**1**	9		>	**9**					
			V/C		0.00	>		<	0.06			0.11		>						
			Q		0	>		<	2			3		>						

MOE - Measure of Effectiveness
LOS - Level of Service
Delay - Average Delay per Vehicle in Seconds
V/C - Volume to Capacity Ratio
Q - 95th Percentile Queue Length (m)
Stor. - Existing Storage (m)
Avail. - Available Storage (m)
TCS - Traffic Control Signal
TWSC - Two-Way Stop Control
< / > - Shared with through movement

TABLE 4.9B: 2033 TOTAL TRAFFIC OPERATIONS – PM PEAK HOUR

Analysis Period	Intersection	Control Type	MOE	Direction/Movement/Approach																
				Eastbound				Westbound				Northbound				Southbound				Overall
				Left	Through	Right	Approach	Left	Through	Right	Approach	Left	Through	Right	Approach	Left	Through	Right	Approach	
PM Peak Hour	Future Road & 16th Street	TWSC	LOS		A	>	**A**		A		**A**			B	**B**					
			Delay		0	>	**0**		0		**0**			13	**13**					
			V/C		0.00	>			0.00					0.16						
			Q		0	>			0					4						
	28th Avenue & 16th Street	TCS	LOS	B	B	B	**B**	B	B	>	**B**	C	C	>	**C**	C	A	>	**B**	**B**
			Delay	13	18	13	**17**	12	10	>	**11**	21	22	>	**21**	26	0	>	**19**	**17**
			V/C	0.08	0.68	0.15		0.38	0.41	>		0.22	0.73	>		0.23	0.00	>		
			Q	0	4	1		0	1	>		2	4	>		2	0	>		
			Stor.	70	-	70		120	-	>		55	-	>		55	-	>		
			Avail.	70	-	69		120	-	>		53	-	>		53	-	>		
	28th Avenue & Future Road (North)	TWSC	LOS	D		B	**C**					A	A		**A**		A	A	**A**	
			Delay	27		13	**17**					8	0		**3**		0	0	**0**	
			V/C	0.40		0.41						0.12	0.00				0.00	0.00		
			Q	14		15						3	0				0	0		
			Stor.	-		-						40	-				-	15		
			Avail.	-		-						37	-				-	15		
	28th Avenue & Future Road (South)	TWSC	LOS	C		>	**C**					<	A		**A**		A	>	**A**	
			Delay	20		>	**20**					<	9		**0**		0	>	**0**	
			V/C	0.20		>						<	0.00				0.00	>		
			Q	5		>						<	0				0	>		
	28th Avenue & 8th Street	TWSC	LOS	C		B	**C**					<	A		**A**		A	>	**A**	
			Delay	21		11	**19**					<	8		**2**		0	>	**0**	
			V/C	0.55		0.08						<	0.02				0.00	>		
			Q	25		2						<	1				0	>		
			Stor.	-		20						<	-				-	>		
			Avail.	-		18						<	-				-	>		
	8th Street & Future Road	TWSC	LOS	<	A		**A**		A	>	**A**					B		>	**B**	
			Delay	<	8		**1**		0	>	**0**					13		>	**13**	
			V/C	<	0.03				0.00	>						0.08		>		
			Q	<	1				0	>						2		>		
	Driveway A & Future Road (North)	TWSC	LOS		A	>	**A**	<	A		**A**	A		>	**A**					
			Delay		0	>	**0**	<	8		**5**	9		>	**9**					
			V/C		0.00	>		<	0.07			0.12		>						
			Q		0	>		<	2			3		>						
	Driveway B & Future Road (North)	TWSC	LOS		A	>	**A**	<	A		**A**	B		>	**B**					
			Delay		0	>	**0**	<	8		**2**	11		>	**11**					
			V/C		0.00	>		<	0.04			0.21		>						
			Q		0	>		<	1			6		>						

MOE - Measure of Effectiveness
LOS - Level of Service
Delay - Average Delay per Vehicle in Seconds
V/C - Volume to Capacity Ratio
Q - 95th Percentile Queue Length (m)
Stor. - Existing Storage (m)
Avail. - Available Storage (m)
TCS - Traffic Control Signal
TWSC - Two-Way Stop Control
< / > - Shared with through movement

4.5.3 2033 Queueing Analysis

In addition to the Synchro 11 analysis, queue length analysis for the 2033 background and total traffic conditions were carried out at the intersection of 28th Avenue and 16th Street, the same as under existing traffic conditions.

The queue analysis has been conducted using the same methodology as under existing traffic conditions.

Table 4.10a and **Table 4.10b** summarize the results of the queue length analysis for 2033 background and total traffic conditions. The results indicate that the queue lengths are projected to stay within the existing storage for all turning movements.

It is noted that according to the MTO queue length method, the northbound through/right-turn queue length is projected to reach 105 metres under 2033 total traffic conditions during the PM peak hour. The queue length is not projected to reach the future east-west roadway on 28th Avenue approximately 237 metres south of 16th Street.

TABLE 4.10A: 2033 THROUGH AND LEFT-TURN QUEUE ANALYSIS

Intersection	Horizon	Lane	# of Lanes	Cycle Length (s)		Volumes (vph)		m_u max	Calc'd Length per Lane (m)	Existing Storage (m)
				AM	PM	AM	PM			
28th Avenue & 16th Street	2033 Background	NBL	1	100	100	79	61	2.2	37.5	55
		NBTR	1			185	255	7.1	90.0	-
		SBL	1			55	51	1.5	30.0	55
		SBTR	1			103	181	5.0	67.5	-
		EBL	1			42	36	1.2	22.5	70
		EBT	1			187	430	11.9	135.0	-
		WBL	1			255	124	7.1	90.0	120
		WBTR	1			385	355	10.7	120.0	-
	2033 Total	NBL	1	100	100	88	75	2.4	37.5	55
		NBTR	1			225	325	9.0	105.0	-
		SBL	1			55	51	1.5	30.0	55
		SBTR	1			148	204	5.7	75.0	-
		EBL	1			42	36	1.2	22.5	70
		EBT	1			187	430	11.9	135.0	-
		WBL	1			280	140	7.8	97.5	120
		WBTR	1			385	355	10.7	120.0	-

TABLE 4.10B: 2033 RIGHT-TURN QUEUE ANALYSIS

Intersection	Horizon	Movement	Cycle Length (s)		Right Turn Volume (vph)		Average Arrival Rate (vpc)		Calc'd Length (m)		Existing Storage (m)
			AM	PM	AM	PM	AM	PM	AM	PM	
28th Avenue & 16th Street	2033 Background	EBR	100	100	25	83	0.7	2.3	10.5	34.5	70
	2033 Total	EBR	100	100	25	83	0.7	2.3	10.5	34.5	70

4.6 2038 Traffic Forecasts

The 2038 traffic forecasts represent ten years after the opening year of the subject school development. The background traffic volumes comprise increases in background road traffic volumes; development traffic generated by three Other Area Developments; and development traffic generated by 100% of commercial and residential development on the adjacent lands. The total traffic volumes comprise Background Traffic Volumes and the addition of School Traffic Volumes.

4.6.1 2038 Background Traffic Conditions

Figure 4.8a and **Figure 4.8b** illustrate the 2038 background traffic volumes, including road traffic growth, other area approved development traffic, and the traffic from the lands adjacent to the subject site to be potentially developed. It is noted that the potential Residential and Commercial developments adjacent to the subject site are assumed to be fully built-out by 2038.

The 2038 background traffic volumes have been analyzed using the same methodology as under existing traffic conditions. Signal timings have not been optimized.

Table 4.11 summarizes the results of the 2038 background traffic operations. The results indicate that the study area intersections are forecast to operate at acceptable levels of service during the AM and PM peak hours.

The eastbound (outbound) movement at 28th Avenue and the Future Road (North) is forecast to operate at LOS C/D and with a maximum 95th percentile queue length of nine metres. The projected queue length would not reach the easterly Site Driveway (Driveway B) of the subject school development, 50 metres west of 28th Avenue.

Appendix I contains the supporting detailed Synchro 11 reports.

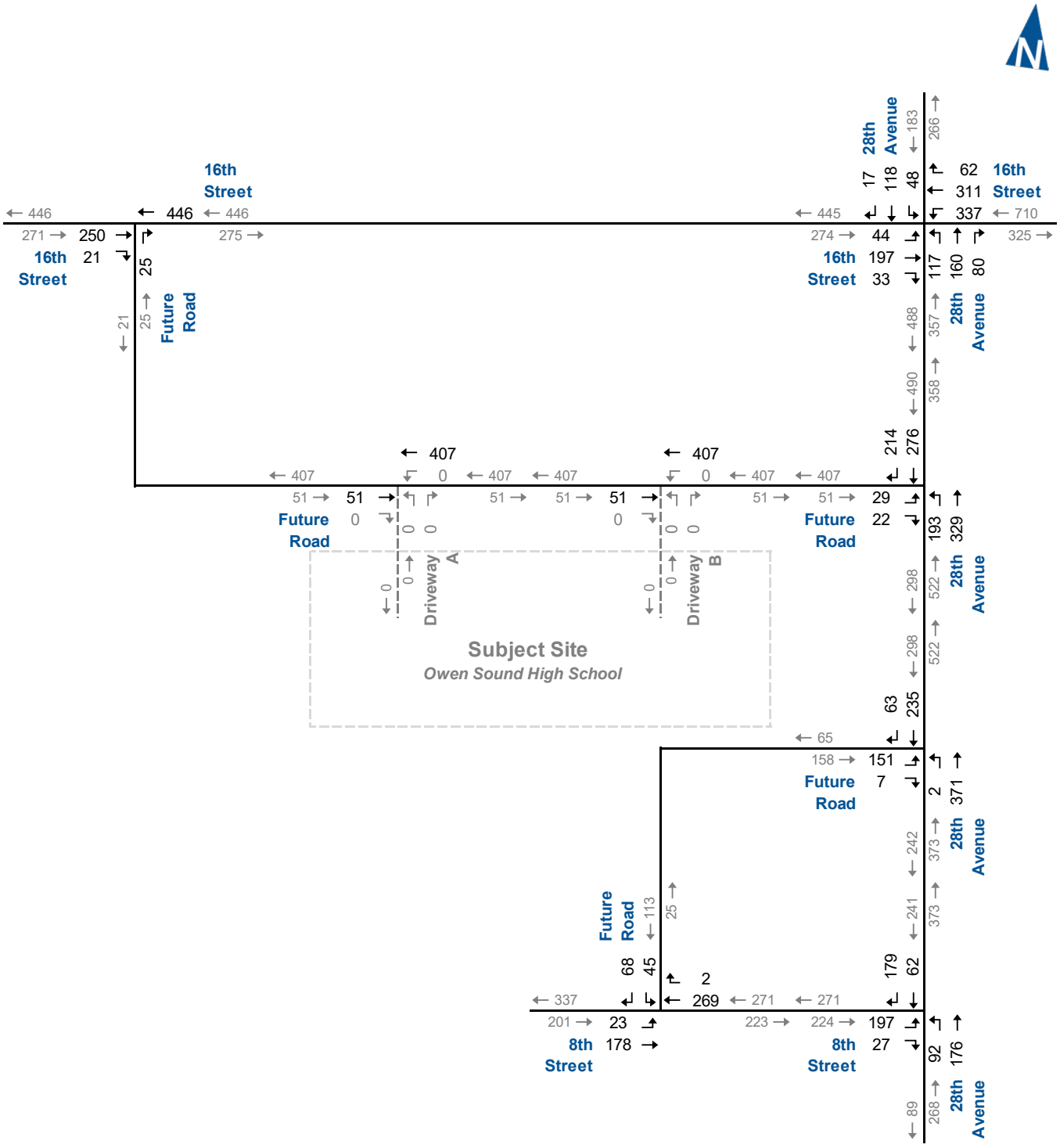

2038 Background Traffic Volumes AM Peak Hour

Bruce-Grey CDSB, New School at 16th Street and 28th Avenue, Owen Sound TIS
230607

Figure 4.8a

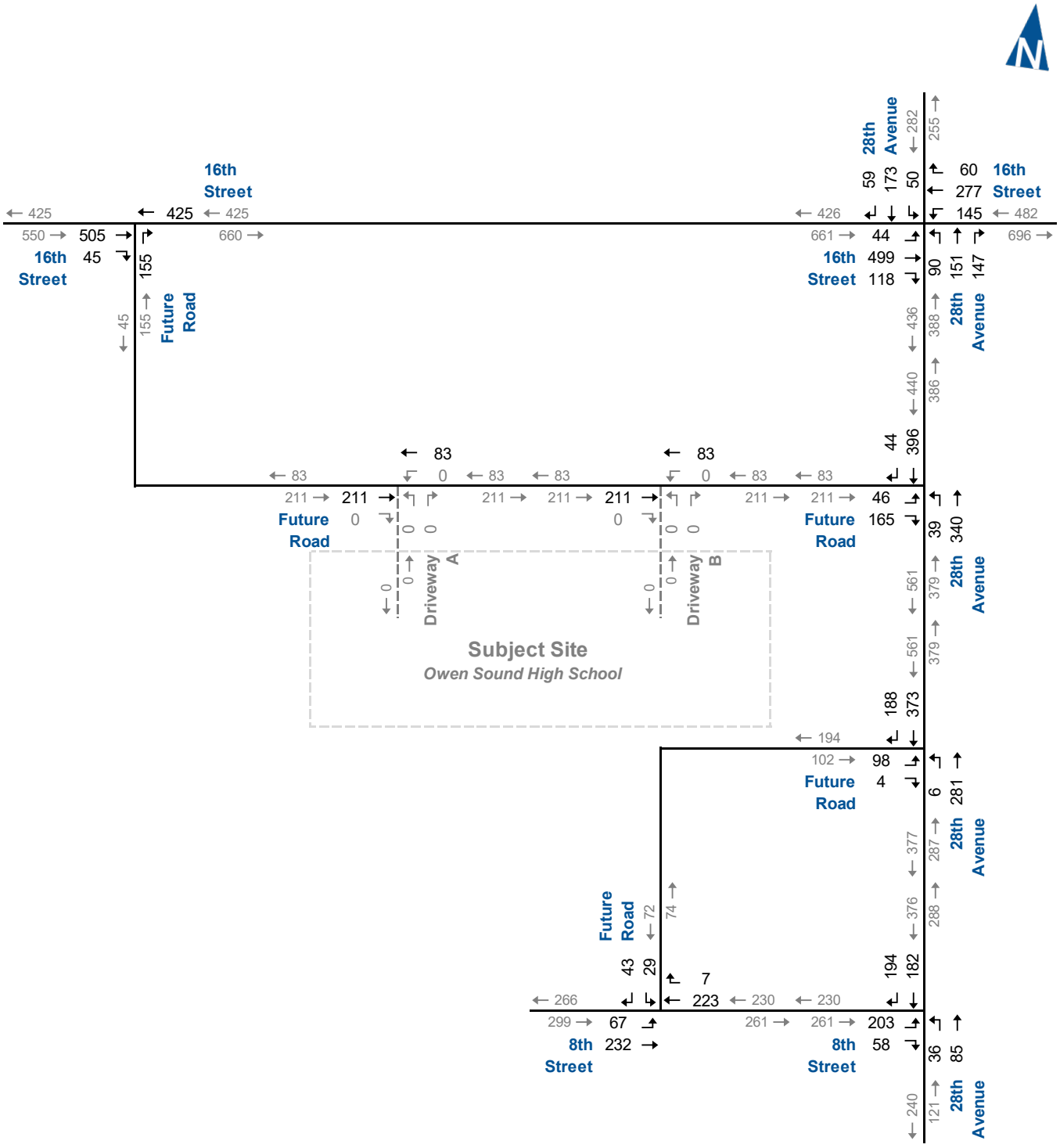

2038 Background Traffic Volumes PM Peak Hour

Bruce-Grey CDSB, New School at 16th Street and 28th Avenue, Owen Sound TIS
230607

Figure 4.8b

TABLE 4.11: 2038 BACKGROUND TRAFFIC OPERATIONS

Analysis Period	Intersection	Control Type	MOE	Direction/Movement/Approach																
				Eastbound				Westbound				Northbound				Southbound				Overall
				Left	Through	Right	Approach	Left	Through	Right	Approach	Left	Through	Right	Approach	Left	Through	Right	Approach	
AM Peak Hour	Future Road & 16th Street	TWSC	LOS		A	>	A		A		A			A	A					
			Delay		0	>	0		0		0			10	10					
			V/C		0.00	>			0.00					0.04						
			Q		0	>			0					1						
	28th Avenue & 16th Street	TCS	LOS	B	B	B	B	A	A	>	A	C	C	>	C	C	B	>	C	B
			Delay	14	16	14	15	10	9	>	9	24	21	>	22	26	19	>	21	15
			V/C	0.11	0.35	0.07		0.55	0.42	>		0.39	0.62	>		0.23	0.37	>		
			Q	0	2	0		1	1	>		3	4	>		2	3	>		
			Stor.	70	-	70		120	-	>		55	-	>		55	-	>		
			Avail.	70	-	70		119	-	>		52	-	>		53	-	>		
	28th Avenue & Future Road (North)	TWSC	LOS	D		A	C					A	A		A		A	A	A	
			Delay	27		10	20					9	0		4		0	0	0	
			V/C	0.16		0.03						0.20	0.00				0.00	0.00		
			Q	4		1						6	0				0	0		
			Stor.	-		-						40	-				-	15		
			Avail.	-		-						34	-				-	15		
	28th Avenue & Future Road (South)	TWSC	LOS	C		A	C					<	A		A		A	>	A	
			Delay	20		10	19					<	8		0		0	>	0	
			V/C	0.40		0.01						<	0.00				0.00	>		
			Q	14		0						<	0				0	>		
	28th Avenue & 8th Street	TWSC	LOS	C		A	C					<	A		A		A	>	A	
			Delay	20		9	18					<	8		3		0	>	0	
			V/C	0.47		0.03						<	0.07				0.00	>		
			Q	18		1						<	2				0	>		
			Stor.	-		20						<	-				-	>		
			Avail.	-		19						<	-				-	>		
	8th Street & Future Road	TWSC	LOS	<	A		A		A	>	A					B		>	B	
			Delay	<	8		1		0	>	0					12		>	12	
			V/C	<	0.02				0.00	>						0.20		>		
			Q	<	1				0	>						5		>		
PM Peak Hour	Future Road & 16th Street	TWSC	LOS		A	>	A		A		A			C	C					
			Delay		0	>	0		0		0			15	15					
			V/C		0.00	>			0.00					0.33						
			Q		0	>			0					10						
	28th Avenue & 16th Street	TCS	LOS	B	B	B	B	B	B	>	B	C	C	>	C	C	C	>	C	B
			Delay	14	20	14	18	13	11	>	11	26	24	>	25	30	21	>	23	19
			V/C	0.10	0.72	0.20		0.45	0.40	>		0.32	0.73	>		0.26	0.47	>		
			Q	1	10	2		0	1	>		4	10	>		3	8	>		
			Stor.	70	-	70		120	-	>		55	-	>		55	-	>		
			Avail.	69	-	68		120	-	>		51	-	>		52	-	>		
	28th Avenue & Future Road (North)	TWSC	LOS	C		B	B					A	A		A		A	A	A	
			Delay	19		13	14					8	0		1		0	0	0	
			V/C	0.16		0.29						0.04	0.00				0.00	0.00		
			Q	4		9						1	0				0	0		
			Stor.	-		-						40	-				-	15		
			Avail.	-		-						39	-				-	15		
	28th Avenue & Future Road (South)	TWSC	LOS	C		B	C					<	A		A		A	>	A	
			Delay	20		11	20					<	9		0		0	>	0	
			V/C	0.31		0.01						<	0.01				0.00	>		
			Q	10		0						<	0				0	>		
	28th Avenue & 8th Street	TWSC	LOS	C		B	B					<	A		A		A	>	A	
			Delay	16		10	15					<	8		2		0	>	0	
			V/C	0.41		0.09						<	0.03				0.00	>		
			Q	15		2						<	1				0	>		
			Stor.	-		20						<	-				-	>		
			Avail.	-		18						<	-				-	>		
	8th Street & Future Road	TWSC	LOS	<	A		A		A	>	A					B		>	B	
			Delay	<	8		2		0	>	0					12		>	12	
			V/C	<	0.06				0.00	>						0.14		>		
			Q	<	2				0	>						4		>		

MOE - Measure of Effectiveness
LOS - Level of Service
Delay - Average Delay per Vehicle in Seconds
V/C - Volume to Capacity Ratio
Q - 95th Percentile Queue Length (m)
Stor. - Existing Storage (m)
Avail. - Available Storage (m)
TCS - Traffic Control Signal
TWSC - Two-Way Stop Control
< / > - Shared with through movement

4.6.2 2038 Total Traffic Operations

Figure 4.9a and **Figure 4.9b** illustrate the 2038 total traffic volumes, including trips generated by the proposed school development.

The 2038 total traffic volumes have been analyzed using the same methodology as under existing and background traffic conditions. Signal timings have not been optimized.

Table 4.12a and **Table 4.12b** summarize the results of the 2038 total traffic operations during the AM and PM peak hours. The results indicate that the study area intersections are forecast to operate at acceptable levels of service during the AM and PM peak hours, except for the following movements:

- 28th Avenue and 8th Street
  - The eastbound left-turn movement is forecast to operate at LOS F with a v/c ratio of 0.93 during the AM peak hour.
- 28th Avenue and Future Road (North)
  - The eastbound movement is forecast to operate at LOS F during the AM and PM peak hours. The v/c ratio is also projected to reach 0.98 during the AM peak hour.

The Site Driveway intersections on the Future Road (North) are forecast to operate at satisfactory levels of service (LOS A/B) during the AM and PM peak hours.

The eastbound (outbound) movement at 28th Avenue and the Future Road (North) is projected to have a maximum 95th percentile queue length of 40 metres. The queue length is not projected to reach the easterly Site Driveway (Driveway B), which is 50 metres west of 28th Avenue.

Appendix J contains the supporting detailed Synchro 11 reports.

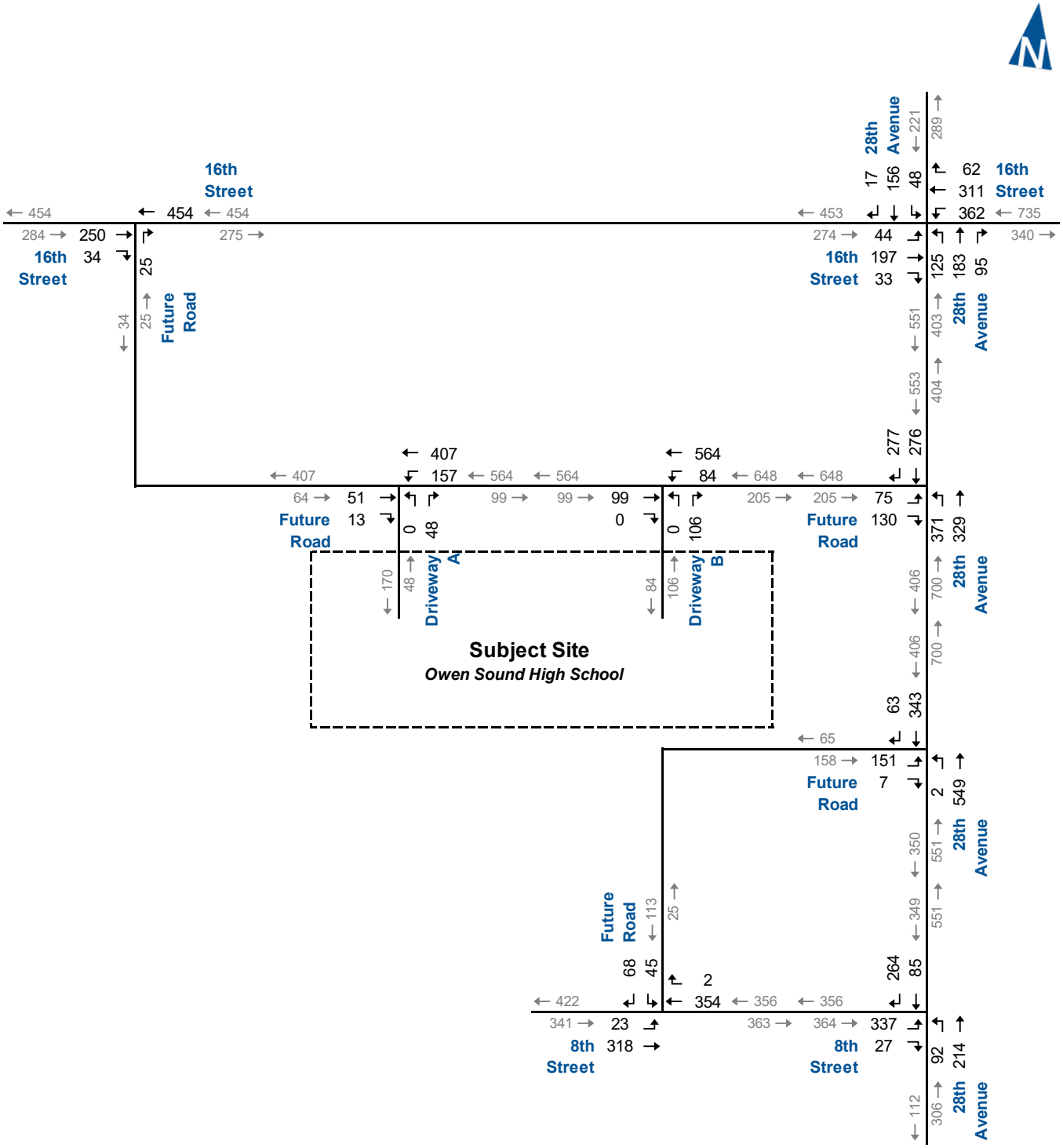

2038 Total Traffic Volumes AM Peak Hour

Figure 4.9a

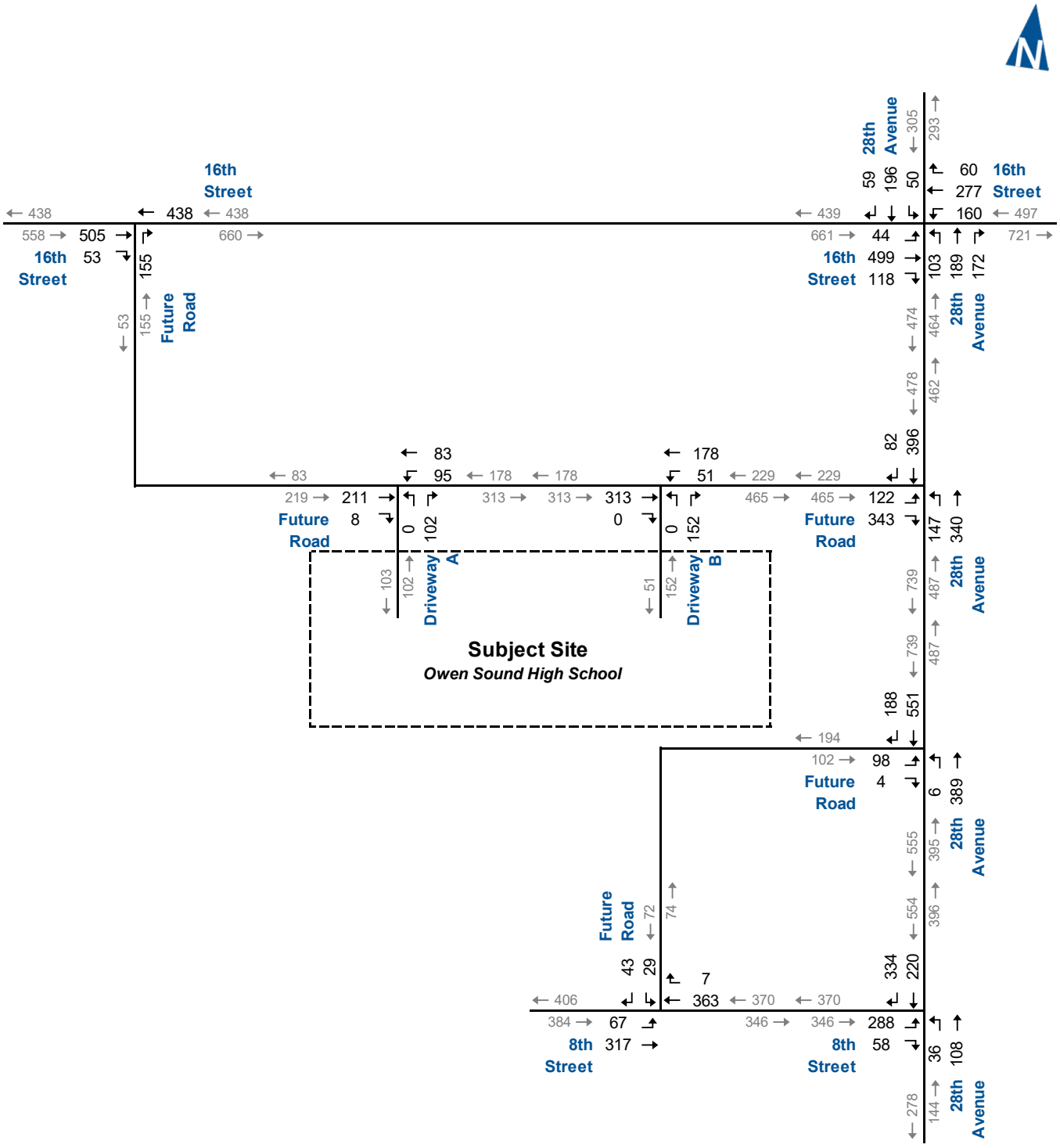

2038 Total Traffic Volumes PM Peak Hour

Bruce-Grey CDSB, New School at 16th Street and 28th Avenue, Owen Sound TIS
230607

Figure 4.9b

TABLE 4.12A: 2038 TOTAL TRAFFIC OPERATIONS – AM PEAK HOUR

Analysis Period	Intersection	Control Type	MOE	Direction/Movement/Approach																
				Eastbound				Westbound				Northbound				Southbound				Overall
				Left	Through	Right	Approach	Left	Through	Right	Approach	Left	Through	Right	Approach	Left	Through	Right	Approach	
AM Peak Hour	Future Road & 16th Street	TWSC	LOS		A	>	**A**		A		**A**			A	**A**					
			Delay		0	>	**0**		0		**0**			10	**10**					
			V/C		0.00	>			0.00					0.04						
			Q		0	>			0					1						
	28th Avenue & 16th Street	TCS	LOS	B	B	B	**B**	B	B	>	**B**	C	C	>	**C**	C	B	>	**C**	**B**
			Delay	15	17	15	**17**	12	10	>	**11**	24	21	>	**22**	26	19	>	**20**	**16**
			V/C	0.11	0.37	0.08		0.62	0.44	>		0.42	0.63	>		0.23	0.42	>		
			Q	1	3	1		2	1	>		4	4	>		2	4	>		
			Stor.	70	-	70		120	-	>		55	-	>		55	-	>		
			Avail.	69	-	69		118	-	>		51	-	>		53	-	>		
	28th Avenue & Future Road (North)	TWSC	LOS	F		B	**F**					B	A		**A**		A	A	**A**	
			Delay	183		11	**74**					11	0		**6**		0	0	**0**	
			V/C	0.98		0.19						0.41	0.00				0.00	0.00		
			Q	40		5						16	0				0	0		
			Stor.	-		-						40	-				-	15		
			Avail.	-		-						24	-				-	15		
	28th Avenue & Future Road (South)	TWSC	LOS	E		B	**E**					<	A		**A**		A	>	**A**	
			Delay	38		11	**37**					<	8		**0**		0	>	**0**	
			V/C	0.62		0.01						<	0.00				0.00	>		
			Q	28		0						<	0				0	>		
	28th Avenue & 8th Street	TWSC	LOS	F		A	**F**					<	A		**A**		A	>	**A**	
			Delay	63		10	**59**					<	8		**2**		0	>	**0**	
			V/C	0.93		0.04						<	0.07				0.00	>		
			Q	76		1						<	2				0	>		
			Stor.	-		20						<	-				-	>		
			Avail.	-		19						<	-				-	>		
	8th Street & Future Road	TWSC	LOS	<	A		**A**		A	>	**A**					B		>	**B**	
			Delay	<	8		**0**		0	>	**0**					15		>	**15**	
			V/C	<	0.02				0.00	>						0.25		>		
			Q	<	1				0	>						8		>		
	Driveway A & Future Road (North)	TWSC	LOS		A	>	**A**	<	A		**A**	A		>	**A**					
			Delay		0	>	**0**	<	8		**2**	9		>	**9**					
			V/C		0.00	>		<	0.11			0.06		>						
			Q		0	>		<	3			2		>						
	Driveway B & Future Road (North)	TWSC	LOS		A	>	**A**	<	A		**A**	A		>	**A**					
			Delay		0	>	**0**	<	8		**1**	9		>	**9**					
			V/C		0.00	>		<	0.06			0.12		>						
			Q		0	>		<	2			3		>						

MOE - Measure of Effectiveness
LOS - Level of Service
Delay - Average Delay per Vehicle in Seconds
V/C - Volume to Capacity Ratio
Q - 95th Percentile Queue Length (m)
Stor. - Existing Storage (m)
Avail. - Available Storage (m)
TCS - Traffic Control Signal
TWSC - Two-Way Stop Control
< / > - Shared with through movement

TABLE 4.12B: 2038 TOTAL TRAFFIC OPERATIONS – PM PEAK HOUR

Analysis Period	Intersection	Control Type	MOE	Direction/Movement/Approach																
				Eastbound				Westbound				Northbound				Southbound				Overall
				Left	Through	Right	Approach	Left	Through	Right	Approach	Left	Through	Right	Approach	Left	Through	Right	Approach	
PM Peak Hour	Future Road & 16th Street	TWSC	LOS		A	>	**A**		A		**A**			C	**C**					
			Delay		0	>	**0**		0		**0**			15	**15**					
			V/C		0.00	>			0.00					0.33						
			Q		0	>			0					10						
	28th Avenue & 16th Street	TCS	LOS	B	C	B	**C**	B	B	>	**B**	C	C	>	**C**	C	C	>	**C**	**C**
			Delay	16	23	16	**22**	16	12	>	**14**	28	30	>	**30**	35	21	>	**24**	**22**
			V/C	0.11	0.75	0.21		0.52	0.41	>		0.35	0.79	>		0.30	0.46	>		
			Q	2	20	3		1	2	>		6	20	>		4	10	>		
			Stor.	70	-	70		120	-	>		55	-	>		55	-	>		
			Avail.	68	-	67		119	-	>		49	-	>		51	-	>		
	28th Avenue & Future Road (North)	TWSC	LOS	F		C	**D**					A	A		**A**		A	A	**A**	
			Delay	57		19	**29**					9	0		**3**		0	0	**0**	
			V/C	0.69		0.60						0.15	0.00				0.00	0.00		
			Q	32		29						4	0				0	0		
			Stor.	-		-						40	-				-	15		
			Avail.	-		-						36	-				-	15		
	28th Avenue & Future Road (South)	TWSC	LOS	E		B	**D**					<	A		**A**		A	>	**A**	
			Delay	36		13	**35**					<	9		**0**		0	>	**0**	
			V/C	0.48		0.01						<	0.01				0.00	>		
			Q	18		0						<	0				0	>		
	28th Avenue & 8th Street	TWSC	LOS	D		B	**D**					<	A		**A**		A	>	**A**	
			Delay	30		11	**27**					<	8		**2**		0	>	**0**	
			V/C	0.71		0.10						<	0.03				0.00	>		
			Q	40		2						<	1				0	>		
			Stor.	-		20						<	-				-	>		
			Avail.	-		18						<	-				-	>		
	8th Street & Future Road	TWSC	LOS	<	A		**A**		A	>	**A**					C		>	**C**	
			Delay	<	8		**2**		0	>	**0**					15		>	**15**	
			V/C	<	0.06				0.00	>						0.18		>		
			Q	<	2				0	>						5		>		
	Driveway A & Future Road (North)	TWSC	LOS		A	>	**A**	<	A		**A**	B		>	**B**					
			Delay		0	>	**0**	<	8		**4**	10		>	**10**					
			V/C		0.00	>		<	0.08			0.14		>						
			Q		0	>		<	2			4		>						
	Driveway B & Future Road (North)	TWSC	LOS		A	>	**A**	<	A		**A**	B		>	**B**					
			Delay		0	>	**0**	<	8		**2**	12		>	**12**					
			V/C		0.00	>		<	0.04			0.23		>						
			Q		0	>		<	1			7		>						

MOE - Measure of Effectiveness
LOS - Level of Service
Delay - Average Delay per Vehicle in Seconds
V/C - Volume to Capacity Ratio
Q - 95th Percentile Queue Length (m)
Stor. - Existing Storage (m)
Avail. - Available Storage (m)
TCS - Traffic Control Signal
TWSC - Two-Way Stop Control
< / > - Shared with through movement

4.6.3 2038 Queueing Analysis

In addition to the Synchro 11 analysis, queue length analysis for the 2038 background and total traffic conditions were carried out at the intersection of 28th Avenue and 16th Street, the same as under existing traffic conditions.

The queue analysis has been conducted using the same methodology as under existing traffic conditions.

Table 4.13a and **Table 4.13b** summarize the results of the queue length analysis for 2038 background and total traffic conditions. The results indicate that the queue lengths are projected to stay within the existing storage for all turning movements.

It is also noted that according to the MTO queue length method, the northbound through/right-turn queue length is projected to reach 127.5 metres under 2038 total traffic conditions during the PM peak hour. The queue length is not projected to reach the future east-west roadway on 28th Avenue approximately 237 metres south of 16th Street.

TABLE 4.13A: 2038 THROUGH AND LEFT-TURN QUEUE ANALYSIS

Intersection	Horizon	Lane	# of Lanes	Cycle Length (s)		Volumes (vph)		m_u max	Calc'd Length per Lane (m)	Existing Storage (m)
				AM	PM	AM	PM			
28th Avenue & 16th Street	2038 Background	NBL	1	100	100	129	94	3.6	52.5	55
		NBTR	1			252	324	9.0	105.0	-
		SBL	1			58	53	1.6	30.0	55
		SBTR	1			159	240	6.7	82.5	-
		EBL	1			44	49	1.4	30.0	70
		EBT	1			207	507	14.1	157.5	-
		WBL	1			339	152	9.4	112.5	120
		WBTR	1			401	369	11.1	127.5	-
	2038 Total	NBL	1	100	100	138	107	3.8	52.5	55
		NBTR	1			293	393	10.9	127.5	-
		SBL	1			58	53	1.6	30.0	55
		SBTR	1			204	263	7.3	90.0	-
		EBL	1			44	49	1.4	30.0	70
		EBT	1			207	507	14.1	157.5	-
		WBL	1			364	168	10.1	120.0	120
		WBTR	1			401	369	11.1	127.5	-

TABLE 4.13B: 2038 RIGHT-TURN QUEUE ANALYSIS

Intersection	Horizon	Movement	Cycle Length (s)		Right Turn Volume (vph)		Average Arrival Rate (vpc)		Calc'd Length (m)		Existing Storage (m)
			AM	PM	AM	PM	AM	PM	AM	PM	
28th Avenue & 16th Street	2038 Background	EBR	100	100	36	118	1	3.3	15.0	49.5	70
	2038 Total	EBR	100	100	36	118	1	3.3	15.0	49.5	70

4.7 Maximum Yield Residential Development

An additional development scenario was considered for the residential development of the lands south of the school site, in which up to 1,500 residential units comprising predominantly townhouses are assumed as maximum development yield.

The study area intersections were analyzed under 2038 total traffic conditions herein, with the traffic volumes adjusted for the increased residential unit count.

4.7.1 Trip Generation

The 1,500 residential units were assumed to be split into 1,200 townhomes, 150 single-family detached homes, and 150 low-rise apartment units.

Table 4.14 summarizes the forecast number of new trips generated by the Residential Lands with up to 1,500 units.

TABLE 4.14: RESIDENTIAL LANDS TRIP GENERATION – MAXIMUM YIELD

Land Use Code	Units	AM Peak Hour				PM Peak Hour			
		Rate	In	Out	Total	Rate	In	Out	Total
210: Single-Family Detached Housing	150	Eq	27	81	**108**	Eq	91	54	**145**
215: Single-Family Attached Housing	1200	Eq	155	463	**618**	Eq	422	294	**716**
220: Multifamily Housing (Low-Rise)	150	Eq	17	52	**69**	Eq	54	31	**85**
Total Trip Generation			**199**	**596**	**795**		**567**	**379**	**946**

LUC 210 | **AM:** Ln(T) = 0.91 Ln(X) + 0.12 | **PM:** Ln(T) = 0.94 Ln(X) + 0.27
LUC 215 | **AM:** T = 0.52(X) - 5.70 | **PM:** T = 0.60(X) - 3.93
LUC 220 | **AM:** T = 0.31(X) + 22.85 | **PM:** T = 0.43(X) + 20.55

The traffic volumes for the residential lands were assigned to the study area road network based on the same trip distribution previously used for the residential lands, summarized in **Table 4.4**.

Appendix D contains the traffic volumes for the Maximum Yield Scenario of the potential development of the Residential Lands adjacent to the subject school site during the AM and PM peak hours.

4.7.2 2038 Maximum Yield Scenario Total Traffic Conditions

The 2038 total traffic volumes have been updated to include development traffic corresponding to 1,500 dwelling units of residential

development along with traffic generated by the school site, other area developments, and 100% development of the commercial lands.

Figure 4.10a and **Figure 4.10b** illustrate the 2038 total traffic volumes.

The 2038 total traffic volumes have been analyzed using the same methodology as under existing traffic conditions. Signal timings have not been optimized.

Table 4.15a and **Table 4.15b** summarize the results of the 2038 total traffic operations during the AM and PM peak hours. The results indicate that the study area intersections are forecast to operate at similar levels of service as under 2038 total traffic conditions under the original development scenario summarized in **Section 4.6.2**, with the following additional critical movements:

- 28th Avenue and 16th Street
  - The northbound shared through/right-turn movement is forecast to operate at LOS D with a v/c ratio of 0.92 during the PM peak hour.
- 28th Avenue and Future Road (South)
  - The eastbound movement is forecast to operate at LOS F with a v/c ratio greater than 1.00 during the PM peak hour.

The Site Driveway intersections on the future road (north) are noted to operate at satisfactory levels of service (LOS A/B) under 2038 total traffic conditions.

Appendix K contains the supporting detailed Synchro 11 reports.

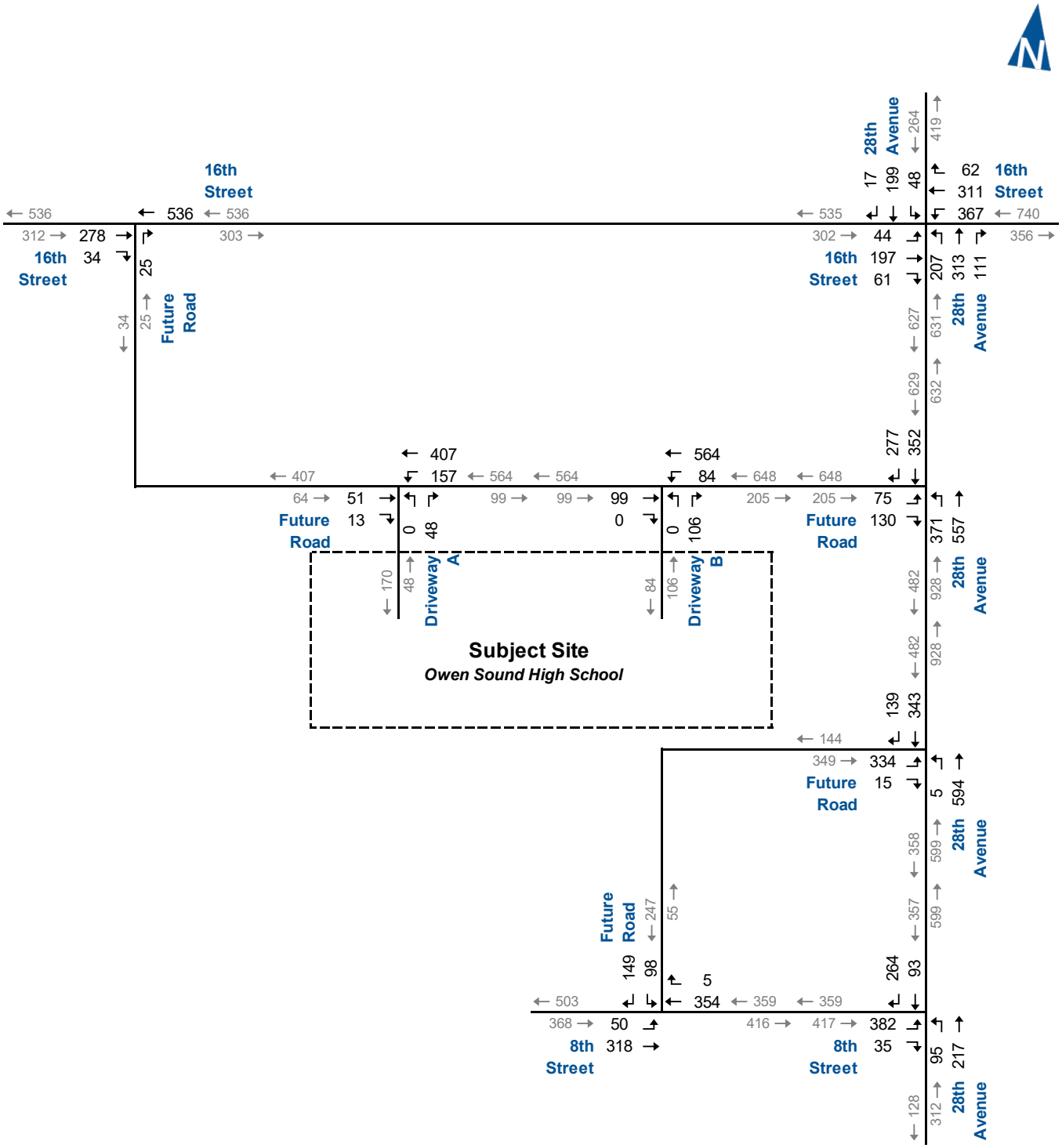

2038 Total Traffic Volumes
Maximum Yield Scenario
AM Peak Hour

Figure 4.10a

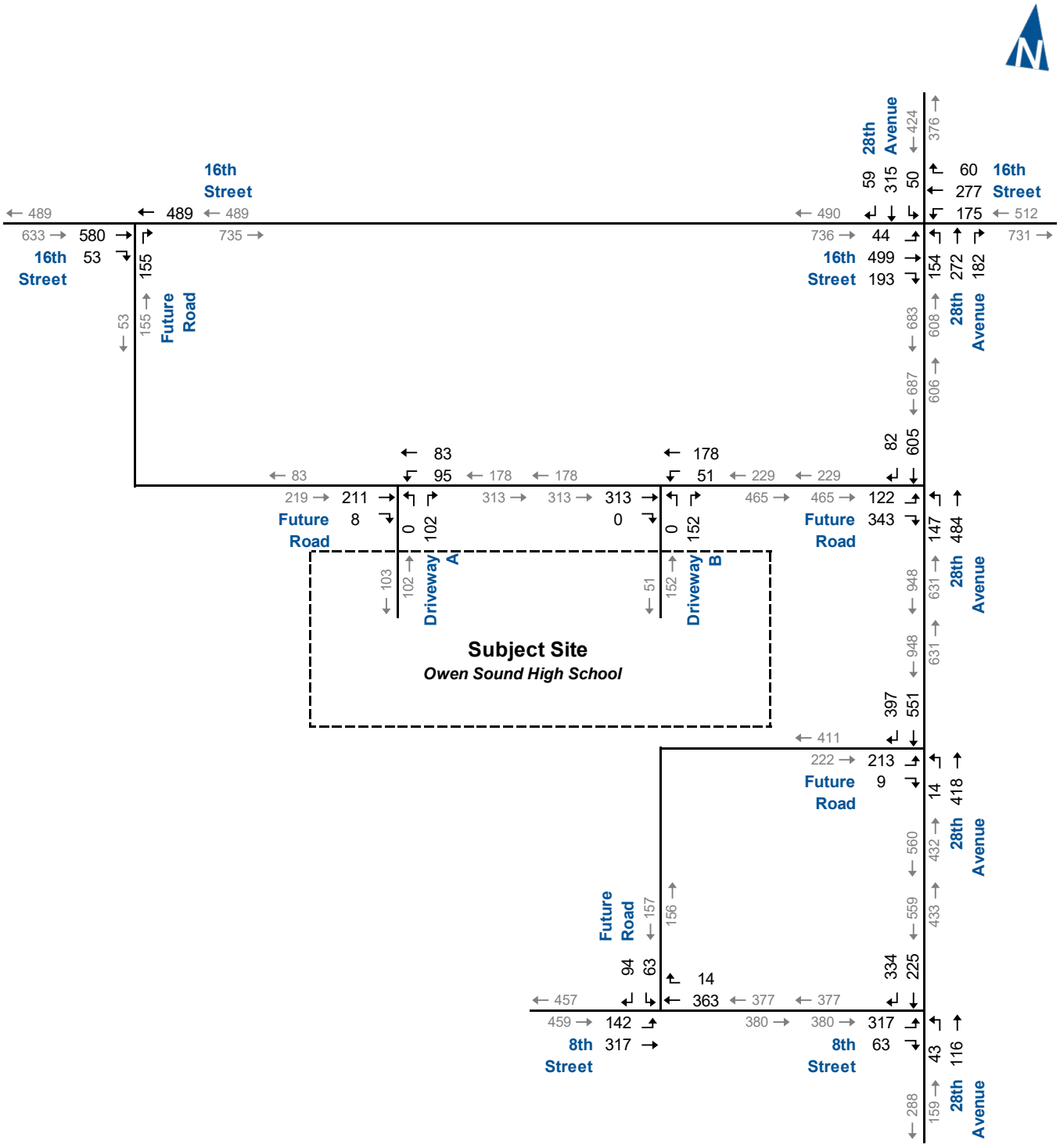

2038 Total Traffic Volumes
Maximum Yield Scenario
PM Peak Hour

Figure 4.10b

TABLE 4.15A: 2038 TOTAL TRAFFIC OPERATIONS – AM PEAK HOUR

Analysis Period	Intersection	Control Type	MOE	Direction/Movement/Approach																
				Eastbound				Westbound				Northbound				Southbound				Overall
				Left	Through	Right	Approach	Left	Through	Right	Approach	Left	Through	Right	Approach	Left	Through	Right	Approach	
AM Peak Hour	Future Road & 16th Street	TWSC	LOS		A	>	**A**		A		**A**			B	**B**					
			Delay		0	>	**0**		0		**0**			10	**10**					
			V/C		0.00	>			0.00					0.04						
			Q		0	>			0					1						
	28th Avenue & 16th Street	TCS	LOS	B	C	B	**C**	C	B	>	**B**	C	C	>	**C**	C	B	>	**B**	**C**
			Delay	20	22	20	**21**	22	15	>	**19**	26	23	>	**24**	29	17	>	**19**	**21**
			V/C	0.13	0.42	0.16		0.75	0.50	>		0.59	0.73	>		0.25	0.40	>		
			Q	2	8	2		8	3	>		8	10	>		3	4	>		
			Stor.	70	-	70		120	-	>		55	-	>		55	-	>		
			Avail.	68	-	68		112	-	>		47	-	>		52	-	>		
	28th Avenue & Future Road (North)	TWSC	LOS	F		B	**F**					B	A		**A**		A	A	**A**	
			Delay	489		12	**186**					12	0		**5**		0	0	**0**	
			V/C	1.63		0.21						0.44	0.00				0.00	0.00		
			Q	58		6						17	0				0	0		
			Stor.	-		-						40	-				-	15		
			Avail.	-		-						23	-				-	15		
	28th Avenue & Future Road (South)	TWSC	LOS	F		B	**F**					<	A		**A**		A	>	**A**	
			Delay	315		11	**302**					<	8		**0**		0	>	**0**	
			V/C	1.57		0.03						<	0.01				0.00	>		
			Q	169		1						<	0				0	>		
	28th Avenue & 8th Street	TWSC	LOS	F		A	**F**					<	A		**A**		A	>	**A**	
			Delay	100		10	**92**					<	8		**2**		0	>	**0**	
			V/C	1.07		0.05						<	0.07				0.00	>		
			Q	102		2						<	2				0	>		
			Stor.	-		20						<	-				-	>		
			Avail.	-		18						<	-				-	>		
	8th Street & Future Road	TWSC	LOS	<	A		**A**		A	>	**A**					C		>	**C**	
			Delay	<	8		**1**		0	>	**0**					21		>	**21**	
			V/C	<	0.05				0.00	>						0.56		>		
			Q	<	1				0	>						25		>		
	Driveway A & Future Road (North)	TWSC	LOS		A	>	**A**	<	A		**A**	A		>	**A**					
			Delay		0	>	**0**	<	8		**2**	9		>	**9**					
			V/C		0.00	>		<	0.11			0.06		>						
			Q		0	>		<	3			2		>						
	Driveway B & Future Road (North)	TWSC	LOS		A	>	**A**	<	A		**A**	A		>	**A**					
			Delay		0	>	**0**	<	8		**1**	9		>	**9**					
			V/C		0.00	>		<	0.06			0.12		>						
			Q		0	>		<	2			3		>						

MOE - Measure of Effectiveness
LOS - Level of Service
Delay - Average Delay per Vehicle in Seconds
V/C - Volume to Capacity Ratio
Q - 95th Percentile Queue Length (m)
Stor. - Existing Storage (m)
Avail. - Available Storage (m)
TCS - Traffic Control Signal
TWSC - Two-Way Stop Control
< / > - Shared with through movement

TABLE 4.15B: 2038 TOTAL TRAFFIC OPERATIONS – PM PEAK HOUR

Analysis Period	Intersection	Control Type	MOE	Direction/Movement/Approach																
				Eastbound				Westbound				Northbound				Southbound				Overall
				Left	Through	Right	Approach	Left	Through	Right	Approach	Left	Through	Right	Approach	Left	Through	Right	Approach	
PM Peak Hour	Future Road & 16th Street	TWSC	LOS		A	>	**A**		A		**A**			C	**C**					
			Delay		0	>	**0**		0		**0**			17	**17**					
			V/C		0.00	>			0.00					0.36						
			Q		0	>			0					12						
	28th Avenue & 16th Street	TCS	LOS	B	C	B	**C**	B	B	>	**B**	D	D	>	**D**	D	C	>	**C**	**C**
			Delay	18	27	20	**24**	18	14	>	**16**	44	48	>	**47**	45	25	>	**28**	**29**
			V/C	0.11	0.76	0.34		0.59	0.41	>		0.69	0.92	>		0.46	0.63	>		
			Q	2	29	8		4	6	>		17	47	>		6	22	>		
			Stor.	70	-	70		120	-	>		55	-	>		55	-	>		
			Avail.	68	-	62		116	-	>		38	-	>		49	-	>		
	28th Avenue & Future Road (North)	TWSC	LOS	F		E	**F**					B	A		**A**		A	A	**A**	
			Delay	230		38	**88**					10	0		**2**		0	0	**0**	
			V/C	1.22		0.80						0.19	0.00				0.00	0.00		
			Q	65		56						5	0				0	0		
			Stor.	-		-						40	-				-	15		
			Avail.	-		-						35	-				-	15		
	28th Avenue & Future Road (South)	TWSC	LOS	F		B	**F**					<	B		**A**		A	>	**A**	
			Delay	237		15	**228**					<	10		**0**		0	>	**0**	
			V/C	1.34		0.03						<	0.02				0.00	>		
			Q	103		1						<	1				0	>		
	28th Avenue & 8th Street	TWSC	LOS	E		B	**E**					<	A		**A**		A	>	**A**	
			Delay	42		11	**37**					<	8		**2**		0	>	**0**	
			V/C	0.82		0.11						<	0.04				0.00	>		
			Q	56		3						<	1				0	>		
			Stor.	-		20						<	-				-	>		
			Avail.	-		17						<	-				-	>		
	8th Street & Future Road	TWSC	LOS	<	A		**A**		A	>	**A**					C		>	**C**	
			Delay	<	9		**3**		0	>	**0**					25		>	**25**	
			V/C	<	0.13				0.00	>						0.49		>		
			Q	<	4				0	>						19		>		
	Driveway A & Future Road (North)	TWSC	LOS		A	>	**A**	<	A		**A**	B		>	**B**					
			Delay		0	>	**0**	<	8		**4**	10		>	**10**					
			V/C		0.00	>		<	0.08			0.14		>						
			Q		0	>		<	2			4		>						
	Driveway B & Future Road (North)	TWSC	LOS		A	>	**A**	<	A		**A**	B		>	**B**					
			Delay		0	>	**0**	<	8		**2**	12		>	**12**					
			V/C		0.00	>		<	0.04			0.23		>						
			Q		0	>		<	1			7		>						

MOE - Measure of Effectiveness
LOS - Level of Service
Delay - Average Delay per Vehicle in Seconds
V/C - Volume to Capacity Ratio
Q - 95th Percentile Queue Length (m)
Stor. - Existing Storage (m)
Avail. - Available Storage (m)
TCS - Traffic Control Signal
TWSC - Two-Way Stop Control
< / > - Shared with through movement

4.7.3 2038 Maximum Yield Scenario Queueing Analysis

In addition to the Synchro 11 analysis, queue length analysis for the 2038 total traffic conditions were carried out at the intersection of 28th Avenue and 16th Street under the maximum yield scenario.

The queue analysis has been conducted using the same methodology as under existing traffic conditions.

Table 4.16a and **Table 4.16b** summarize the results of the queue length analysis for 2038 total traffic conditions under the maximum yield scenario. The results indicate that the following queue lengths are projected to exceed the existing storages:

- the northbound left-turn movement queue length is projected to reach 82.5 metres, exceeding the existing storage of 55 metres; and
- the eastbound right-turn movement is projected to reach 81 metres, exceeding the available storage of 70 metres.

It is also noted that according to the MTO queue length method, the northbound through/right-turn queue length is projected to reach 150 metres under the maximum yield scenario of the 2038 total traffic conditions. The queue length is not projected to reach the future east-west roadway on 28th Avenue approximately 237 metres south of 16th Street.

TABLE 4.16A: 2038 MAXIMUM YIELD SCENARIO THROUGH AND LEFT-TURN QUEUE ANALYSIS

Intersection	Horizon	Lane	# of Lanes	Cycle Length (s)		Volumes (vph)		m_u max	Calc'd Length per Lane (m)	Existing Storage (m)
				AM	PM	AM	PM			
28th Avenue & 16th Street	2038 Total	NBL	1	100	100	228	160	6.3	82.5	55
		NBTR	1			448	501	13.9	150.0	-
		SBL	1			58	53	1.6	30.0	55
		SBTR	1			255	382	10.6	120.0	-
		EBL	1			44	49	1.4	30.0	70
		EBT	1			207	507	14.1	157.5	-
		WBL	1			369	184	10.3	120.0	120
		WBTR	1			401	369	11.1	127.5	-

TABLE 4.16B: 2038 MAXIMUM YIELD SCENARIO RIGHT-TURN QUEUE ANALYSIS

Intersection	Horizon	Movement	Cycle Length (s)		Right Turn Volume (vph)		Average Arrival Rate (vpc)		Calc'd Length (m)		Existing Storage (m)
			AM	PM	AM	PM	AM	PM	AM	PM	
28th Avenue & 16th Street	2038 Total	EBR	100	100	67	193	1.9	5.4	28.5	81.0	70

5 Study Area Intersections and Road Classification

The results of the intersection operational analyses under different future traffic conditions are summarized in **Section 4**. The implications of the results for the study area road system and intersections are summarized in this section.

5.1 16th Street (Highway 26) & 28th Avenue (Grey County Road 5) Intersection

The above intersection is under MTO's jurisdiction and operates under traffic signal control. MTO's Access Management Policy requires a minimum separation distance of 400 metres from this intersection to any new road connection or intersection on either 28th Avenue or 16th Street.

The future Local Road connection north of the School Site, at an all-moves T-intersection, on 28th Avenue is to be located at approximately 237 metres south of the intersection. A second Local Road connection at a restricted RIRO intersection on 16th Street is to be located at approximately 300 metres west of the intersection.

The above intersection distances are based on the locations of property appropriate for development and existing physical constraints. The road system is also part of land use changes and corresponding access requirements.

The TIS provides operational justification for the future intersection locations based on the results in **Section 4**.

<u>Northbound Approach Lane</u>:

The existing northbound left-turn lane on 28th Avenue has a storage length of 55 metres and a taper length of 140 metres, thus extending for a total distance of 195 metres south of the intersection.

The proposed new intersection is located at 237 metres south of the intersection, 42 metres outside the end of the taper.

The projected maximum northbound 95th percentile queue length in Synchro analysis is 17 metres (well within existing the storage of 55 metres), during the PM peak hour under 2038 total traffic conditions corresponding to the maximum yield of 1,500 dwelling units on the residential lands. The corresponding through/right-turn queue length is

47 metres, which would be 190 metres clear of the future Local Road intersection on 28th Avenue.

The queue length estimates based on the MTO methodology are 52.5 metres and 127.5 metres for the left-turn lane and the through/right-turn lane, respectively, under 2038 total traffic conditions. The projected queue lengths are respectively within the existing left-turn lane storage and clear of the separation of the new local road intersection.

It is noted that in the maximum yield scenario assuming 1,500 dwelling units for residential development, the queue length for the northbound left-turn lane is projected to be 82.5 metres under MTO queue length methodology. This would exceed the existing storage of 55 metres.

The northbound through/right-turn queuing is projected to be 150 metres and would be clear of the location of the new local road (north) intersection on 28th Avenue.

It should be noted that the projected queue length of 82.5 metres for the northbound left-turn movement exceeding the existing storage of 55 metres, corresponds to a maximum yield scenario of 1,500 units, which may or not be reached and likely would not be reached until long after 2038. At the same time the distance of 237 metres to the new local road (north) intersection provides sufficient space to extend the northbound lane storage and taper to accommodate future increases in traffic volumes.

<u>Southbound Discharge Lane</u>

As noted, a southbound right-turn lane is to be implemented at the new Local Road intersection (north) on 28th Avenue. The lane will have a storage length of 15 metres and a taper length of 70 metres, for a total length of 85 metres which would be 152 metres clear of the intersection to the north.

<u>Eastbound Approach Lane</u>

The RIRO intersection for the new Local Road on 16th Street is to be located at approximately 300 metres west of 28th Avenue.

The projected maximum eastbound left-turn and eastbound right-turn 95th percentile queue lengths are two metres and eight metres, respectively (well within existing the storage lengths of 70 metres each), during the PM peak hour under 2038 total traffic conditions corresponding to the maximum yield of 1,500 dwelling units on the residential lands. The corresponding queue length for the through

movement is 29 metres, which would be 269 metres clear of the future Local Road RIRO intersection on 16th Street.

The queue lengths based on the MTO methodology are 30 metres, 157.5 metres, and 81 metres for the eastbound left turn, through, and right-turn movements, respectively, all of which are well within the separation distance of 300 metres to the new RIRO intersection.

The above queue length projections indicate that the proposed Local Road (North) intersections on 28th Avenue and on 16th Street are adequately separated from the intersection of 16th Street and 28th Avenue.

5.2 Future Intersection of 28th Avenue and Local Road (North)

As noted in **Section 4.3.1**, the new Local Road intersection on 28th Avenue abutting the School Site will include northbound left-turn and southbound right-turn lanes with 40 metres and 15 metres of storage lengths, respectively. In addition, the eastbound approach lane will include separate left-turn and right-turn lanes.

For the northbound left-turn lane, the storage requirements under future traffic conditions were assessed using the Ministry of Transportation Design Supplement for the Transportation Association of Canada (TAC) Geometric Design Guide for Canadian Roads[11], and based on the nomographs for left-turn lanes on a two-lane undivided highway at an unsignalized intersection with a design speed of 10-20 kilometres per hour over the posted speed limit. The corresponding storage lengths are:

- 2028 Total Traffic Conditions: 15 metres;
- 2033 Total Traffic Conditions: 40 metres; and
- 2038 Total Traffic Conditions: 80 metres.

We recommend that a northbound left-turn lane with 40 metres of storage be included as part of the road modifications for the school opening in 2028. It would be appropriate to reassess the need for extending the storage length in conjunction with the full development of the residential lands to the south.

Appendix L includes left-turn lane nomographs.

[11] *MTO Design Supplement for TAC Geometric Design Guide for Canadian Roads*, June 2017.

5.2.1 Southbound Right-Turn Lane

Exclusive right-turn lanes are generally considered for implementation when the volume of the right-turning vehicles is between 10-20 percent[12] of the through volumes, subject to a minimum of 60 vehicles per hour in the design hour or when turning traffic creates a hazard.

The projected AM/PM peak hour southbound right-turn volumes for the 2028 (school opening year) total traffic conditions, are respectively, 76 vph and 46 vph, respectively. These volumes are higher than the 10% threshold and increase under future traffic conditions.

Based on the above projection, it would be appropriate to include a southbound right-turn lane with 15 metres of storage and 70-metre taper at the new intersection from 2028.

5.2.2 Eastbound Left-Turn Lane and Right-Turn Lane

As noted, separate left-turn and right-turn lanes should be provided for the eastbound approach at the T-intersection of the new Local Road at 28th Avenue (north). The left-turn lane could have a storage of 40 metres and a taper length of 70 metres that would extend to a point between the two driveways to the school site.

5.2.3 Sight Distances

Available sight distances for the Future Road (North) at 28th Avenue were measured during a field visit on 15 November 2023 and are compared with sight distance requirements identified in the Transportation Association of Canada (TAC) Geometric Design Guide for Canadian Roads[13] (GDGCR).

It is noted that the measurements were taken from a location on the west side of 28th Avenue 315 metres south of 16th Street, where the school access on 28th Avenue was to be located. The location of the proposed Future Road (North) to 28th Avenue is 237 metres south of 16th Street.

Stopping and Decision Sight Distance requirements were reviewed for a vehicular speed of 100 km/h, 20 km/h higher than the posted speed limit of 80 km/h.

---

[12] Transportation Research Board, National Research Council, Highway Capacity Manual, Special Report 209, Third Edition, Washington, 1998.

[13] Transportation Association of Canada, *Geometric Design Guide for Canadian Roads*, June 2017.

Table 5.1 summarizes the sight distance measurements and requirements at the Future Road (North) on 28th Avenue.

The left-turn and right-turn from stop decision sight distances from the Future Road (North) to 28th Avenue satisfy the corresponding TAC requirements. It is also noted that the stopping sight distance from the south on 28th Avenue approaching the Future Road (North) satisfies the requirement; however, the stopping sight distance from the north fails to satisfy the minimum requirement.

It is noted that the location of the Future Road (North) on 28th Avenue is expected to have more optimal available sight distances given its location in relation to the vertical curve to the north along 28th Avenue. This will be confirmed as part of the design of the future intersection.

TABLE 5.1: FUTURE ROAD (NORTH) SIGHT DISTANCE ASSESSMENT

Intersection	Decision Sight Distance (m)				Stopping Sight Distance (m)	
	Left-Turn		Right-Turn			
	Required	Measured	Required	Measured	Required	Measured
28th Avenue and Future Road (North)	210	**215**	185	**185**	185	**162 (north)** **215 (south)**

5.3 Site Driveways

The need for an auxiliary westbound left-turn turning lane on the future east-west local roadway at the school site driveways, based on the same requirements and guidelines identified in **Section 5.2.1**.

Based on the above criteria, westbound left-turn lanes on the Future Road (North) at Site Driveway A and Site Driveway B are not warranted under 2038 total traffic conditions.

Appendix L includes the warrant nomographs.

5.4 OTM Signal Warrant

The requirement for traffic signal control at the future intersections of (1) 28th Avenue and the Future Road (North) and (2) 28th Avenue and 8th Street were assessed using the Ontario Traffic Manual (OTM) signal warrant guidelines[14].

The assessments were undertaken under 2038 total traffic conditions, under both development scenarios for the residential lands south of the subject school site.

Based on the warrant analysis, traffic signal control is not warranted under either analysis scenario of the 2038 forecast total traffic conditions at the intersection of 28th Avenue and the Future Road (North) or at 28th Avenue and 8th Street.

Appendix M contains the warrant analysis worksheets.

5.5 28th Avenue Classification and Right-of-Way

28th Avenue is currently classified as a Minor Arterial Road and has a two-lane rural cross-section. Its classification status and potential widening requirement have been reviewed based on the future total traffic volumes projected for the roadway.

5.5.1 Minor Arterial Road

The existing PM peak hour traffic volumes correspond to AADT volumes below 4,000 vehicles per day on 28th Avenue between 8th Street and 16th Street and exceeding 2,000 vehicles per day north of 16th Street and south of 8th Street.

The projected traffic volumes for the 2038 Horizon Year correspond AADT volumes below 10,000 (9,500) vehicles per day on 28th Avenue

[14] Ontario Traffic Manual, Book 12: Traffic Signals.

between 8th Street and 16th Street, below 6,000 vehicles per day north of 16th Street, and exceeding 4,000 vehicles per day south of 8th Street.

However, the AADT projections indicate a maximum 12,500 vpd for the 2038 Horizon Year corresponding to a maximum residential yield of 1,500 dwelling units on the Adjacent Lands to the south.

The projected AADT volumes on 28th Avenue are within the range of 5,000 vehicles per day to 20,000 vehicles per day for Minor Arterial Roads[15]. They are also less than the lower threshold of 10,000 vehicles per day for Major Arterial roads, except under maximum yield residential development scenario.

Based on the above projections of future traffic volumes including the maximum yield residential development scenario, it would be appropriate for 28th Avenue (Grey County Road 5) to remain classified as a Minor Arterial Road.

The intersection spacing for the intersections of the two future local roads on 28th Avenue, between 16th Street and 8th Street exceeds the minimum requirement of 200 metres for Minor Arterial Roads.

The current posted speed limits on 28th Avenue are 80 km/h to the north of 8th Street, and 60 km/h to the south of 8th Street. With the proposed development of the New School on 28th Avenue, it would be appropriate have a consistent posted speed limit of 60 km/h north and south of 8th Street.

5.5.2 Road Right-of-Way

The AADT projections are based on two-way traffic volumes during the PM peak hour. The maximum peak directional volume projected for either peak hour is 687 vph, in the southbound direction for the PM peak hour, just north of the school site.

As the maximum peak hour, peak directional volume is within the single lane capacity of a minor arterial roadway, the widening of 28th Avenue will not be required to accommodate the land use projections assessed in this study. However, it is appropriate to protect Right-of-Way for future improvements and accommodate the 5.0-metre widening requirement along the school site frontage.

[15] Transportation Association of Canada, *Geometric Design Guide for Canadian Roads*, Table 2.6.4: Characteristics of Urban Roads, June 2017.

5.6 Active Transportation

As noted, the transport of school students will primarily be undertaken by school buses. The existing road system is generally based on rural cross-sections with minimal active transportation infrastructure. However, given the potential future development of the Adjacent Lands, it would be appropriate to include sidewalks and bicycle lanes as appropriate as part of road reconstruction and new road construction.

6 Conclusions and Recommendations

6.1 Conclusions

Based on the investigations carried out, it is concluded that:

- **Existing Traffic Conditions:** The study area intersections are operating at acceptable levels of service, and with no problem movements.
- **Development Trip Generation:** The school development is forecast to generate 408 equivalent vehicle trips (that include 54 school bus trips) during both the AM and PM peak hours.
- **2028 Background Traffic Conditions:** The study area intersections are forecast to operate at acceptable levels of service.
- **2028 Total Traffic Conditions:** The study area intersections are forecast to operate at acceptable levels of service.

  The Site Driveway intersections on the Future Road (North) are forecast to operate at LOS A during the AM and PM peak hours.
- **2033 Background Traffic Conditions:** The study area intersections are forecast to operate at acceptable levels of service.
- **2033 Total Traffic Conditions:** The study area intersections are forecast to operate at acceptable levels of service.

  The School Driveway intersections on the Future Road (North) are forecast to operate at satisfactory levels of service (LOS A/B) during the AM and PM peak hours.
- **2038 Background Traffic Conditions:** The study area intersections are forecast to operate at acceptable levels of service.
- **2038 Total Traffic Conditions:** The study area intersections are forecast to operate at acceptable levels of service with a few critical movements.

  The School Driveway intersections on the Future Road (North) are forecast to operate at satisfactory levels of service (LOS A/B) during the AM and PM peak hours.
- **2038 Total Traffic Conditions: Maximum Yield Scenario:** The study area intersections are forecast to operate at similar levels of service as under 2038 total traffic conditions under the original development scenario summarized above, with some additional critical movements:

The Site Driveway intersections on the future road are noted to operate at satisfactory levels of service (LOS A/B) under 2038 total traffic conditions under the additional scenario.

- **Highway 26 (16th Street) and Grey County Road 5 (28th Avenue) Intersection:** This intersection is under MTO's jurisdiction and operates under traffic signal control. MTO's Access Management Policy requires a minimum separation distance of 400 metres from this intersection to any new road connection or intersection on either 28th Avenue or 16th Street.

  The future Local Road connection north of the School Site, at an all-moves T-intersection, on 28th Avenue is to be located at approximately 237 metres south of the intersection. A second Local Road connection at a restricted RIRO intersection on 16th Street is to be located at approximately 300 metres west of the intersection.

  The above intersection separation distances are based on the locations of property appropriate for development and existing physical constraints. The road system is also part of land use changes and corresponding access requirements.

  The intersection operational and queuing analyses indicate acceptable levels of service and adequate separation distances to accommodate queuing, under future traffic conditions for all three horizon years and the respective land use scenarios.

- **Grey County Road 5 (28th Avenue) Classification and Right-of-Way:** Based on traffic projections for the 2038 Horizon Year, the roadway could remain as a Minor Arterial Road, as currently classified. The posted speed limit on 28th Avenue to the north of 8th Street could be reduced to 60 km/h, which would be same as the posted speed limit to the south of 8th Street. Although, no road widening is identified as required, the Right-of-Way for future improvements should be protected including the five-metre-wide land dedication along the frontage of the school site.

6.2 Recommendations

Based on the findings and conclusions of this study, it is recommended that the Site Plan for the proposed New School on 28th Avenue be considered for approval, along with the construction of the new east-west local road abutting the school site as identified herein.

Appendix A

Terms of Reference

Bruce-Grey Catholic District School Board
New School at 16th Street and 28th Avenue, Owen Sound
Terms of Reference for Transportation Impact Assessment

Paradigm Transportation Solutions Limited

2024-04
230607

ptsl.com

Great Place To Work. Certified NOV 2023 - NOV 2024 CANADA

5A-150 Pinebush Road
Cambridge ON N1R 8J8
p: 519.896.3163
905.381.2229
416.479.9684

www.ptsl.com

2024-04-10
Project: 230607

RE: BRUCE-GREY CATHOLIC DISTRICT SCHOOL BOARD – NEW SCHOOL AT 16TH STREET & 28TH AVENUE, OWEN SOUND: TERMS OF REFERENCE FOR TRANSPORTATION IMPACT STUDY

The Bruce-Grey Catholic District School Board is undertaking the development of a New Secondary School, located at 16th Street and 28th Avenue, in the City of Owen Sound. **Paradigm Transportation Solutions Limited** (Paradigm) has been retained by the School Board to prepare the Transportation Impact Study (TIS) for the New School. As part of the pre-consultation process for Planning Act approvals, Paradigm has prepared the following Terms of Reference (TOR) for the TIS, incorporating comments and input provided by the City of Owen Sound, the County of Grey, and the Ministry of Transportation Ontario (MTO).

Background

The proposed New Secondary School is to be located on the west side of 28th Avenue East, approximately 237 metres south of 16th Street. The school site is 20 acres in area, with a frontage of approximately 160 metres on 28th Avenue East, and a depth of approximately 518 metres. The north boundary of the site will abut a Proposed Future Road, comprising an east-west portion that will connect to 28th Avenue East at an all-moves T-intersection, and a north-south portion that will connect to 16th Street at a restricted Right-in-Right-out intersection, approximately 298 metres west of 28th Avenue.

A corresponding future road alignment is proposed for the area south of the school site and comprising an east-west portion and north-south portion respectively connecting to 28th Avenue East and 8th Street at two all-moves T-intersections.

Figure 1 (attached) illustrates the location of the proposed School Site and the surrounding road system including the proposed future roads.

The Site Plan for the school indicates a two-storey building (7,500 m^2, footprint accommodating 12,634 m^2 GFA) located at the easterly end along 28th Avenue East; and an Athletic Field located to the west of the School Building. Two separated driveways are identified on the proposed future road for entrance and exit, along with a Fire Route, Bus Drop Off location, and a Parking Layout of 150 spaces. The easterly driveway is located approximately 50 metres from the east property line, and the two driveways are separated by 80 metres.

The school will accommodate 1,012 students and 90-95 staff including teachers and custodians.

The new school is expected to be completed and be operational by 2028.

Figure 2 (attached) shows the Preliminary Site Plan for the school.

The lands are currently zoned 'Rural' (RUR) and 'Hazard Lands' (ZH), and a Zoning By-law Amendment (ZBA) is required to permit the school use. A transportation impact study is identified among the supporting studies required as part of a complete Application for Planning Act approvals.

The City's Pre-Consultation Response indicates the requirement for Terms of Reference for supporting studies, including the TIS, to be reviewed and approved as appropriate, by the City of Owen Sound, the County of Grey, the Ministry of Transportation Ontario (MTO), and the Grey Sauble Conservation Authority.

Paradigm has prepared the Terms of Reference for the Transportation Impact Study based on the requirements identified in the Pre-Consultation Response and its Enclosures, viz.,

- Schedule A: Issue Summary and Completeness Requirements
  - Section A – City of Owen Sound Official Plan Requirements
  - Section H – City's Engineering Services Decision Comments
  - Section J – MTO Comments
  - Section K – County of Grey Transportation Services Comments
- Schedule B: Agency Comments
- Schedule C: Property Summary

In addition, and as noted above, the Terms of Reference outlined below incorporate the comments and input provided by City of Owen Sound, the County of Grey, and the Ministry of Transportation Ontario (MTO).

Terms of Reference

Issues and Requirements

The following summarizes the Study Area Road System, issues and requirements pertaining to the transportation impact assessment for the New School.

- Study Area Road System: As shown in **Figure 1**, the Study Area Road System includes the following existing and new roads:
  - 16th Street East (Highway 26) is an east-west roadway, which is identified as Provincial Highway to the east of 28th Avenue, and a Connecting Link to the west. The signalized intersection at 28th Avenue is under Provincial jurisdiction.

- 28th Avenue East is a north-south roadway and is designated as a Minor Arterial/County Highway under the jurisdiction of Grey County as Grey Road 5.
- 8th Street East is a continuation of Grey Road 5, on an east-west alignment to the west of the 28th Avenue East that extends south.
- The Proposed Future Roads are being considered as municipal Local Roads of the City Owen Sound connecting 16th Street East and 28th Avenue within the southwest quadrant of their intersection, and 8th Street East and 28th Avenue within the northwest quadrant of their intersection.
- The westerly boundary of the Study Area is located along the existing Grey County CP Rail Trail.

- MTO Requirements:
  - In accordance with MTO's Access Management Policy a public road/intersection must be located a minimum of 400m down a County or Municipal/Township Road from an existing highway intersection. The current proposal for a new public road/intersection 237m south of the existing intersection of Highway 26 (16th Street East) and 28th Avenue East does not meet MTO's requirements for access management. However, MTO will review a TIS prepared in support of the proposed arrangement and determine whether the proposal is acceptable.
- The County of Grey Comments & Requirements:
  - 28th Avenue Road Classification & Intersection Spacing: 28th Avenue is currently classified as a Minor Arterial roadway; however, future traffic increases could potentially require the road to be classified as a Major Arterial road. This would have implications for intersection spacing for future connections to 28th Avenue. The TIS should assess the potential for reclassifying 28th Avenue based on future traffic projections and make recommendations, including the appropriateness of intersection spacing.
  - Road Widening: 5-metre severance off the frontage to Grey Road 28 for road widening purposes for future development/road upgrades.
  - Vehicular access: Access arrangement must provide for: 60 metre separation between school entrance and exit access points; adequate sight distances for safe driveway operations; and assessment of Auxiliary Left-lane requirement.
- Parking: Onsite parking must meet the requirements of the City's Zoning By-law, AODA, and Site Development and Engineering Standards. Barrier-free parking stalls must satisfy the City's design and signage requirements.
- Active Transportation: Pedestrian walkways, sidewalks, and connections to City Streets should be addressed in the Site Plan, as appropriate.
- Public Transit: There are no City transit stops or routes in close proximity to this site. The Core route is available on 16th Avenue East. Opportunities for transit access will be addressed through the Transportation Plan.

- Transportation Plan (TP): is required to ensure pedestrian access and compatibility with sidewalks, transit routes, bicycle routes, and multi-use trails. The TP must demonstrate regard for the goals and intent of the:
    - City's Official Plan (2021)
    - Transportation Master Plan (2010)
    - Trails Master Plan (2012)
    - Accessibility for Ontarians with Disabilities Act, 2005, S.O. 2005, c. 11
- Transportation Impact Study (TIS) Requirements:
    - Study Area will include Highway 26 (16th Street E), Grey Road 5 (28th Avenue E), and Grey Road 5 (8th Street E).
    - Study Area Intersections will include (see **Figure 1**):
        - Highway 26 (16th Street E) and Grey Road 5 (28th Avenue E)
        - Grey Road 5 (28th Avenue E) and Grey Road 5 (8th Street E)
        - Proposed Future Road and 28th Avenue East (All Moves T intersection)
        - Proposed Future Road and 16th Street (RIRO T intersection)
        - School Access Points on the Proposed Future Road (with need assessment for left-turn lane)
        - Future local road intersections on 28th Avenue E and on 8th Street E to the south of the school site.
    - Analysis Periods: Weekday AM/PM peak hours
    - Horizon Years: Opening Year (2028); Five years after opening (2033); Ten years after opening (2038).
    - Future Background Traffic:
        - Confirm Background Traffic Growth Rate (1%/2%)
        - Identify Other Area Developments for Background Development Traffic

Additional Information

The following additional information pertaining to school transportation and other area developments has been obtained since the circulation of the draft TOR. The information will be used in the preparation of the TIS.

School Transportation:

As noted, the school will accommodate 1,012 students and 90-95 staff members. The operating hours will be between 8:00 AM and 4:00 on weekdays, with in-class hours between 9:00 AM and 3:30 PM.

All of the students are expected to be transported by bus, with 27 buses taking students from home to school in the morning and 27 buses doing the return trip in the afternoon.

Based on the school catchment area, 20 of the 27 buses are expected to be arriving/leaving from/to north on 28th Avenue, and seven of them arriving/leaving from/to south on 28th Avenue.

The approximately 100 staff members are expected to use private cars with the same direction of travel as the school buses.

There would likely be morning drop-off and afternoon pick-up of students using their private vehicles. A conservatively high proportion of 10% will be used, in trip generation estimates, for student drop-off/pick-up using private vehicles.

The student/staff arrivals in the morning would likely be during the AM peak for road traffic; however, the afternoon departures from the school are likely to precede the PM peak hour for road traffic.

For this reason, in addition to the analysis of intersection operations during AM/PM peak hours for road traffic, the TIS will also include analysis during the school traffic peak hour (3:00 to 4:00) in the afternoon.

Other Area Developments:

As illustrated in **Figure 3**, three other area developments located along 16t Street East have been identified for inclusion in estimating future background road traffic volumes. Independent transportation impact studies have been completed for each of the three developments and the trip generation estimates from these studies will be used in the subject TIS for estimating background road traffic volumes.

All three developments will be assumed to be in place by 2028, the assumed School Opening Year, for the purpose future horizon year traffic analysis.

Figure 3 also illustrates two areas identified for potential future developments. The first area is to the north of the new school site and is slated to be developed for commercial uses, and the second area is to the south of the school site and is planned to accommodate residential uses.

Based on information provided by the City of Owen Sound, the following land use statistics will be used for estimating future development traffic from these lands:

- Commercial Development (North): 37,200 m^2 GFA.
- Residential Development (South): 500 units low density housing, and 200 units medium/high density housing.

Trip generation will be estimated as part of the subject TIS and will be based on ITE trip rates corresponding to appropriate land use classification.

The development of the two areas will be in the future and they are not part of any current planning approval process. For the purpose of impact assessment under future traffic conditions, the following timelines will be assumed in the subject TIS:

- 2028 – No development on the above two lands.
- 2033 – 50% of both commercial and residential developments.

- 2038 – 100% of both commercial and residential developments.

Future Road Connections:

As noted, the proposed future local roads (north and south of the school site) will provide access connections for future commercial and residential developments in the two areas.

For the purposes of impact assessment, only the east-west portion of the local road system to the north will be assumed to be in place by 2028. As noted, the school access points are located on this roadway section.

All sections of the future road system, north and south of the school site, will be assumed to be in place by 2033.

TIS Framework

The TIS study will be based on the TOR and undertaken in conformance with:

- Ministry of Transportation TIS Guidelines[1]
- Ontario Traffic Manual (OTM) Signal Warrants – Justification 7[2]
- OTM Pedestrian Crossing Treatments – Book 15[3]
- Transportation Association of Canada (TAC) Canadian Roundabout Design Guide[4]
- TIS Work Plan

TIS Work Plan

- **Confirm Terms of Reference & Scope of Work:** Circulate TOR for review, input and approval by the City of Owen Sound, County of Grey, and Ministry of Transportation.
- **Background Review & Data Collection:**
  - Confirm Background Traffic Growth Rate
  - Identify Other Area Development for Background Traffic
  - Conduct new Intersection Traffic Counts (2)
  - Obtain Signal Timing Plans
  - Site visit to review road conditions and sight distance assessment
- **New School Information:** Obtain/confirm information on

[1] Ministry of Transportation Ontario, *General Guidelines for the Preparation of Traffic Impact Studies*, 2023.
[2] Ontario Ministry of Transportation, *Ontario Traffic Manual Book 12: Traffic Signals*, (Toronto: Queen's Printer for Ontario, 2012).
[3] Ontario Ministry of Transportation, *Ontario Traffic Manual Book 15: Pedestrian Crossing Treatments*, (Toronto: Queen's Printer for Ontario, 2016).
[4] Transportation Association of Canada, *Canadian Roundabout Design Guide*, (Ottawa: TAC, 2017).

- Site Statistics: Building GFA & Parking Supply
- School Statistics: Number of Students / Staff / Hours
- School Transport: School Catchment & Anticipated School Bus Traffic; North/South directional split on 28th Avenue
- Site Plan: Access Locations / Internal Roadways / Parking
- Anticipated Opening Year
- Note: Information on school statistics is now available and is summarized above in this TOR.

- **New School Traffic Estimates:** New School Traffic Volumes for AM/PM peak hours will be based on:
  - Trip Generation: Will be based on information provided by BGCDSB. ITE Trip Rates (Trip Generation Manual, 11th Edition) will be used for comparative assessment.
  - Trip Distribution: Based on road traffic distribution & School Catchment Area location.
  - Modal Share: No non-auto modal share will be assumed except for School Bus Share.
- **Traffic Analysis:** Intersection operational analysis at the Study Area intersections will be undertaken using Synchro software and applying MTO methodology for queuing analysis, for the following traffic conditions:
  - Base Year/Existing (2024) – based on 2024 traffic counts
  - Future Traffic Conditions – Opening Year (2028), Five-Year Horizon (2033) & Ten-Year Horizon (2038), for:
    - Background Traffic Conditions including background road traffic & other area development traffic volumes; and
    - Total Traffic Conditions with new School Traffic added to Future Background Traffic.
- **Traffic Impact Assessment:** Based on the results of the analysis, which will include Volume-to-capacity (v/c) ratios, Level of Service (LOS) and Queuing, the TIS will identify any operational deficiencies, the net impact of the proposed school on the study area road system, and feasible remedial measures if required.
- **Proposed Future Road & 28th Avenue:** Review the implications of the Proposed Future Road intersection at 28th Avenue to confirm that the new intersection will not affect intersection operations at the existing signalized intersection at 28th Avenue and 16th Street, based on the following:
  - operational analysis for the 16th Street / Highway 26 intersection;
  - operational analysis for the new intersection on 28th Avenue East; and
  - sight distance requirements for the new intersection on 28th Avenue East.

- **Access Review:** Review of the school access locations on the Future Road:
  - results of operation analysis;
  - sight distance assessment; and
  - inbound left-turn lane assessment.
- **Input to Transportation Plan**: Based on the TIS results and findings, provide input the preparation of the Transportation Plan, for active transportation infrastructure and facilities, and future transit connections.

Transportation Impact Study Report

We will document the study methodologies, findings and conclusions in a draft report for review by the City of Owen Sound, the County of Grey, and the Ministry of Transportation. The final report will incorporate review comments and changes therefrom. The final report will include appendices containing the detailed analysis results and any data collected.

We are pleased to submit the above Terms of Reference for review and input from the Township of City of Owen Sound, the County of Grey, and the Ministry of Transportation.

Yours very truly,

PARADIGM TRANSPORTATION SOLUTIONS LIMITED

Rajan Philips
M.SC, P.Eng.
Senior Transportation Consultant

Attachments

paradigm TRANSPORTATION SOLUTIONS LIMITED

Location of Subject Site

Bruce-Grey CDSB, New School at 16th Street and 28th Avenue, Owen Sound TIS TOR
230607

Figure 1

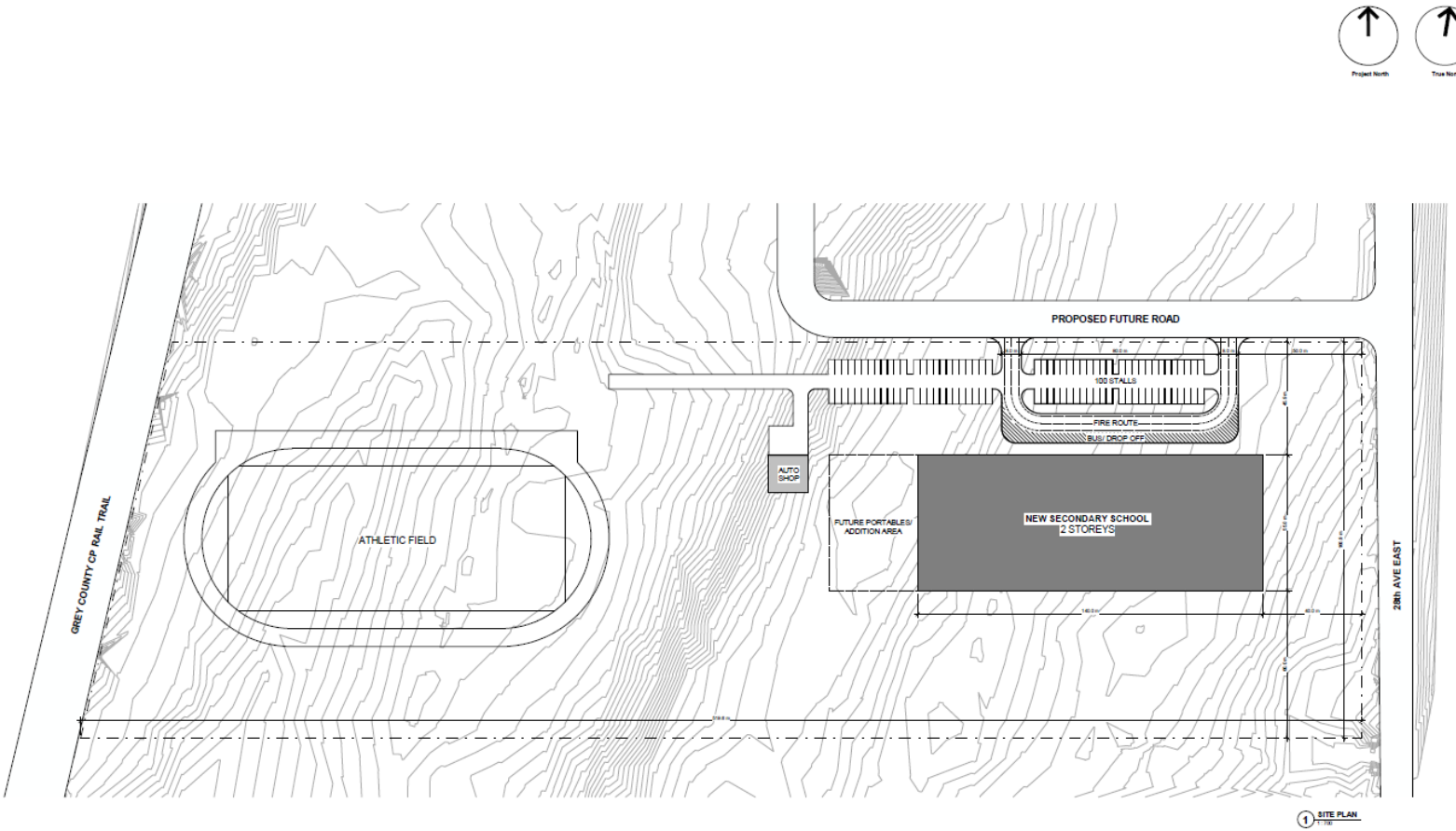

NEW SECONDARY SCHOOL | PRELIMINARY SITE PLAN | 23026 2024-01-25 | SRM architects+urban+designers

paradigm TRANSPORTATION SOLUTIONS LIMITED

Preliminary Site Plan

Figure 2

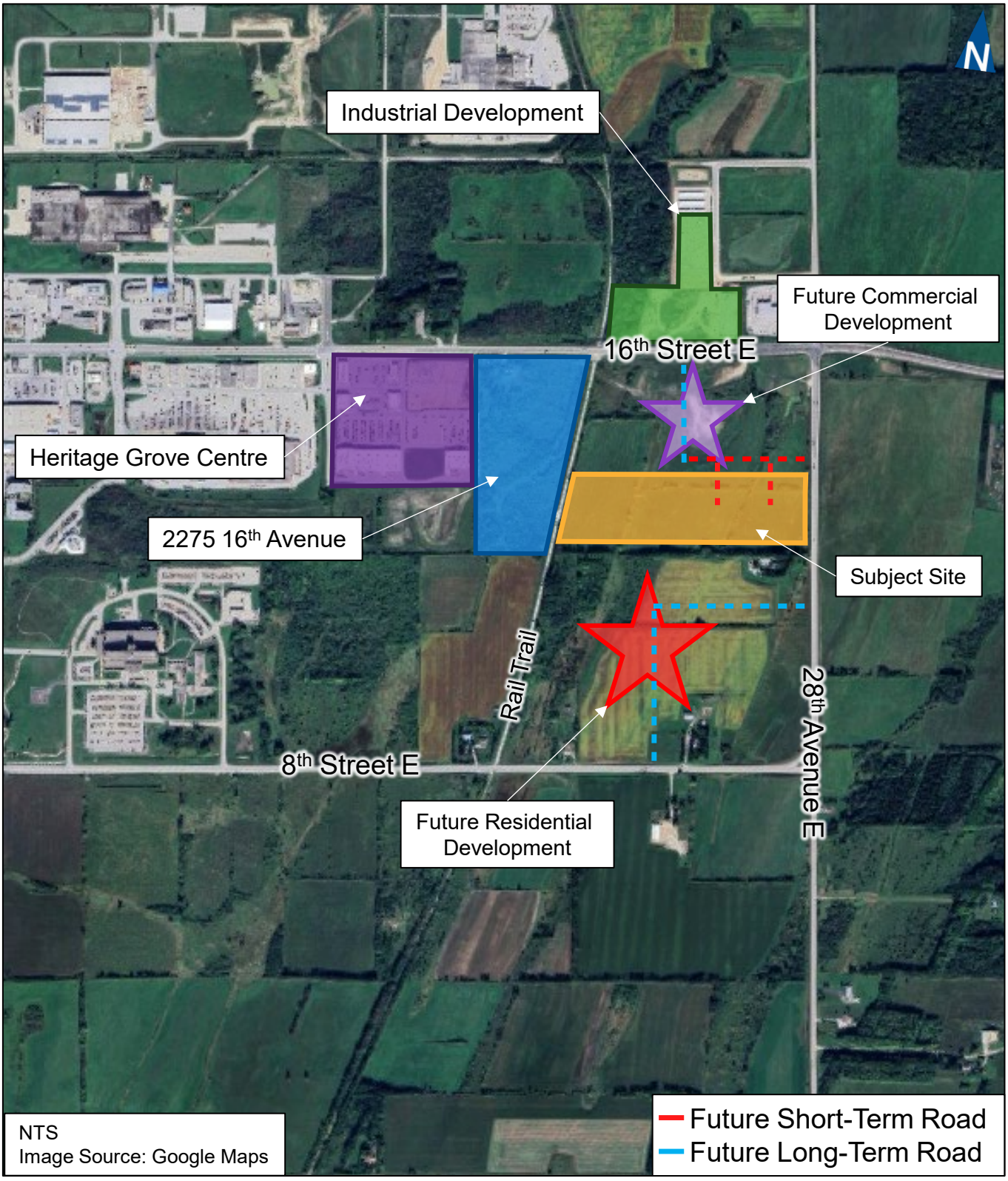

paradigm TRANSPORTATION SOLUTIONS LIMITED

Other Area Development Locations

Figure 3

Appendix B

Existing Traffic Data

Paradigm Transportation Solutions Limited
5A-150 Pinebush Rd

Cambridge, Ontario, Canada N1R 8J8
519-896-3163 cbowness@ptsl.com

Count Name: 8th Street & 28th Avenue
Site Code: 230607
Start Date: 11/14/2023

Turning Movement Data

Start Time	8th Street Eastbound					28th Avenue Northbound					28th Avenue Southbound					
	Left	Right	U-Turn	Peds	App. Total	Left	Thru	U-Turn	Peds	App. Total	Thru	Right	U-Turn	Peds	App. Total	Int. Total
7:00 AM	15	4	0	0	19	4	9	0	0	13	7	11	0	0	18	50
7:15 AM	12	2	0	0	14	8	10	0	0	18	8	15	0	0	23	55
7:30 AM	10	2	0	0	12	6	13	0	0	19	7	31	0	0	38	69
7:45 AM	8	5	0	0	13	24	27	0	0	51	11	40	0	0	51	115
Hourly Total	45	13	0	0	58	42	59	0	0	101	33	97	0	0	130	289
8:00 AM	13	4	0	0	17	14	19	0	0	33	7	34	0	0	41	91
8:15 AM	14	3	0	0	17	22	17	0	0	39	13	28	0	0	41	97
8:30 AM	10	5	0	0	15	18	12	0	0	30	11	41	0	0	52	97
8:45 AM	8	2	0	0	10	12	24	0	0	36	12	27	0	0	39	85
Hourly Total	45	14	0	0	59	66	72	0	0	138	43	130	0	0	173	370
9:00 AM	9	3	0	0	12	5	13	0	0	18	13	22	0	0	35	65
9:15 AM	7	3	0	0	10	4	8	0	0	12	12	18	0	0	30	52
9:30 AM	15	5	0	0	20	6	7	0	0	13	13	14	0	0	27	60
9:45 AM	8	4	0	0	12	11	12	0	0	23	9	11	0	0	20	55
Hourly Total	39	15	0	0	54	26	40	0	0	66	47	65	0	0	112	232
*** BREAK ***	-	-	-	-	-	-	-	-	-	-	-	-	-	-	-	-
11:30 AM	10	5	0	0	15	4	11	0	0	15	19	23	0	0	42	72
11:45 AM	18	6	0	0	24	9	11	0	0	20	15	11	0	0	26	70
Hourly Total	28	11	0	0	39	13	22	0	0	35	34	34	0	0	68	142
12:00 PM	14	6	0	0	20	7	13	0	0	20	16	17	0	0	33	73
12:15 PM	15	4	0	0	19	3	18	0	0	21	31	21	0	0	52	92
12:30 PM	13	8	0	0	21	6	11	0	0	17	11	25	0	0	36	74
12:45 PM	21	7	0	0	28	7	13	0	0	20	25	18	0	0	43	91
Hourly Total	63	25	0	0	88	23	55	0	0	78	83	81	0	0	164	330
1:00 PM	15	5	0	0	20	9	22	0	0	31	12	22	0	0	34	85
1:15 PM	17	6	0	0	23	7	9	0	0	16	20	9	0	0	29	68
*** BREAK ***	-	-	-	-	-	-	-	-	-	-	-	-	-	-	-	-
Hourly Total	32	11	0	0	43	16	31	0	0	47	32	31	0	0	63	153
3:00 PM	31	11	0	0	42	7	14	0	0	21	19	25	0	0	44	107
3:15 PM	27	9	0	0	36	5	15	0	0	20	17	13	0	0	30	86
3:30 PM	28	14	0	0	42	8	13	0	0	21	16	13	0	0	29	92
3:45 PM	19	15	0	0	34	6	7	0	0	13	17	17	0	0	34	81
Hourly Total	105	49	0	0	154	26	49	0	0	75	69	68	0	0	137	366
4:00 PM	46	17	0	0	63	3	13	0	0	16	22	24	0	0	46	125
4:15 PM	29	8	0	0	37	10	9	0	0	19	22	23	0	0	45	101
4:30 PM	31	16	0	0	47	8	14	0	0	22	24	26	0	0	50	119

4:45 PM	27	5	0	0	32	4	21	0	0	25	22	16	0	0	38	95
Hourly Total	133	46	0	0	179	25	57	0	0	82	90	89	0	0	179	440
5:00 PM	32	8	0	0	40	5	20	0	0	25	19	22	0	0	41	106
5:15 PM	15	4	0	0	19	10	14	0	0	24	32	23	0	0	55	98
5:30 PM	9	7	0	0	16	7	10	0	0	17	11	13	0	0	24	57
5:45 PM	11	5	0	0	16	3	7	0	0	10	14	13	0	0	27	53
Hourly Total	67	24	0	0	91	25	51	0	0	76	76	71	0	0	147	314
Grand Total	557	208	0	0	765	262	436	0	0	698	507	666	0	0	1173	2636
Approach %	72.8	27.2	0.0	-	-	37.5	62.5	0.0	-	-	43.2	56.8	0.0	-	-	-
Total %	21.1	7.9	0.0	-	29.0	9.9	16.5	0.0	-	26.5	19.2	25.3	0.0	-	44.5	-
Motorcycles	0	0	0	-	0	0	0	0	-	0	1	0	0	-	1	1
% Motorcycles	0.0	0.0	-	-	0.0	0.0	0.0	-	-	0.0	0.2	0.0	-	-	0.1	0.0
Cars & Light Goods	543	203	0	-	746	257	391	0	-	648	464	653	0	-	1117	2511
% Cars & Light Goods	97.5	97.6	-	-	97.5	98.1	89.7	-	-	92.8	91.5	98.0	-	-	95.2	95.3
Buses	4	4	0	-	8	4	3	0	-	7	1	2	0	-	3	18
% Buses	0.7	1.9	-	-	1.0	1.5	0.7	-	-	1.0	0.2	0.3	-	-	0.3	0.7
Single-Unit Trucks	5	0	0	-	5	1	29	0	-	30	28	8	0	-	36	71
% Single-Unit Trucks	0.9	0.0	-	-	0.7	0.4	6.7	-	-	4.3	5.5	1.2	-	-	3.1	2.7
Articulated Trucks	5	1	0	-	6	0	13	0	-	13	13	3	0	-	16	35
% Articulated Trucks	0.9	0.5	-	-	0.8	0.0	3.0	-	-	1.9	2.6	0.5	-	-	1.4	1.3
Bicycles on Road	0	0	0	-	0	0	0	0	-	0	0	0	0	-	0	0
% Bicycles on Road	0.0	0.0	-	-	0.0	0.0	0.0	-	-	0.0	0.0	0.0	-	-	0.0	0.0
Bicycles on Crosswalk	-	-	-	0	-	-	-	-	0	-	-	-	-	0	-	-
% Bicycles on Crosswalk	-	-	-	-	-	-	-	-	-	-	-	-	-	-	-	-
Pedestrians	-	-	-	0	-	-	-	-	0	-	-	-	-	0	-	-
% Pedestrians	-	-	-	-	-	-	-	-	-	-	-	-	-	-	-	-

Paradigm Transportation Solutions Limited
5A-150 Pinebush Rd

Cambridge, Ontario, Canada N1R 8J8
519-896-3163 cbowness@ptsl.com

Count Name: 8th Street & 28th Avenue
Site Code: 230607
Start Date: 11/14/2023
Page No: 3

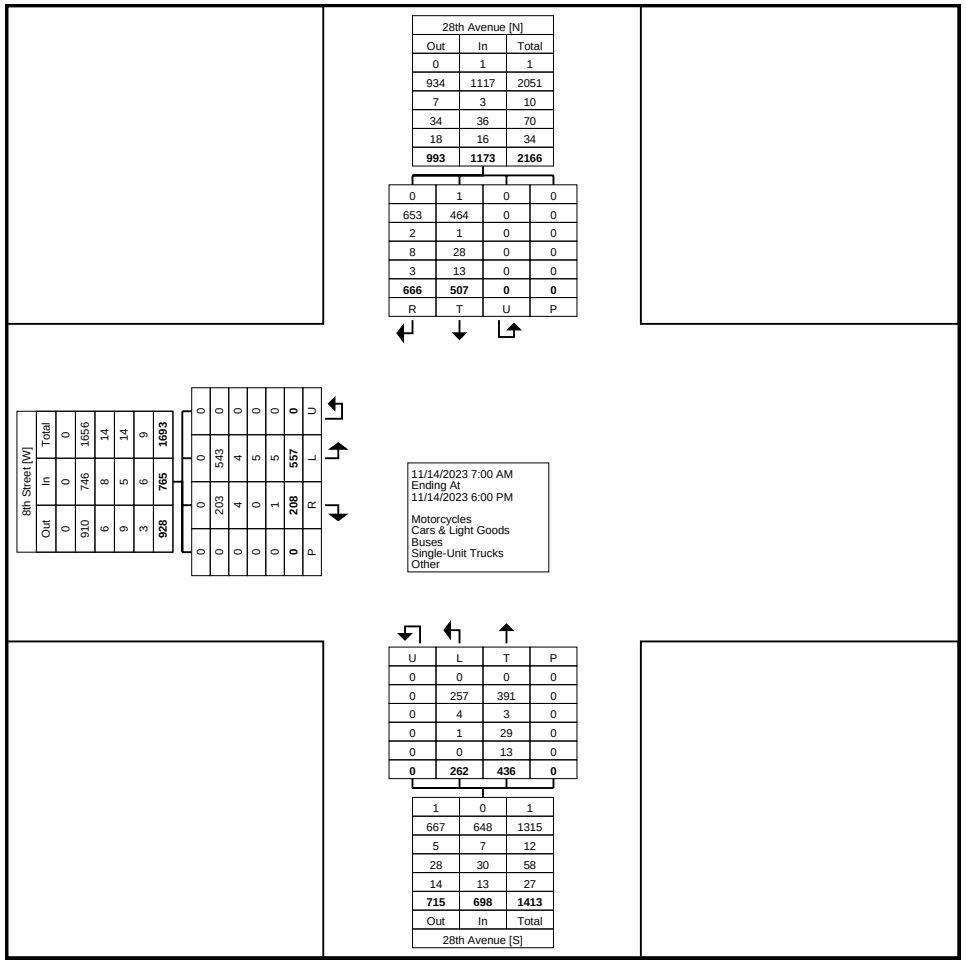

Turning Movement Data Plot

Paradigm Transportation Solutions Limited
5A-150 Pinebush Rd

Cambridge, Ontario, Canada N1R 8J8
519-896-3163 cbowness@ptsl.com

Count Name: 8th Street & 28th Avenue
Site Code: 230607
Start Date: 11/14/2023

Turning Movement Peak Hour Data (7:45 AM)

Start Time	8th Street Eastbound					28th Avenue Northbound					28th Avenue Southbound					
	Left	Right	U-Turn	Peds	App. Total	Left	Thru	U-Turn	Peds	App. Total	Thru	Right	U-Turn	Peds	App. Total	Int. Total
7:45 AM	8	5	0	0	13	24	27	0	0	51	11	40	0	0	51	115
8:00 AM	13	4	0	0	17	14	19	0	0	33	7	34	0	0	41	91
8:15 AM	14	3	0	0	17	22	17	0	0	39	13	28	0	0	41	97
8:30 AM	10	5	0	0	15	18	12	0	0	30	11	41	0	0	52	97
Total	45	17	0	0	62	78	75	0	0	153	42	143	0	0	185	400
Approach %	72.6	27.4	0.0	-	-	51.0	49.0	0.0	-	-	22.7	77.3	0.0	-	-	-
Total %	11.3	4.3	0.0	-	15.5	19.5	18.8	0.0	-	38.3	10.5	35.8	0.0	-	46.3	-
PHF	0.804	0.850	0.000	-	0.912	0.813	0.694	0.000	-	0.750	0.808	0.872	0.000	-	0.889	0.870
Motorcycles	0	0	0	-	0	0	0	0	-	0	0	0	0	-	0	0
% Motorcycles	0.0	0.0	-	-	0.0	0.0	0.0	-	-	0.0	0.0	0.0	-	-	0.0	0.0
Cars & Light Goods	45	17	0	-	62	74	69	0	-	143	38	141	0	-	179	384
% Cars & Light Goods	100.0	100.0	-	-	100.0	94.9	92.0	-	-	93.5	90.5	98.6	-	-	96.8	96.0
Buses	0	0	0	-	0	4	0	0	-	4	0	2	0	-	2	6
% Buses	0.0	0.0	-	-	0.0	5.1	0.0	-	-	2.6	0.0	1.4	-	-	1.1	1.5
Single-Unit Trucks	0	0	0	-	0	0	4	0	-	4	4	0	0	-	4	8
% Single-Unit Trucks	0.0	0.0	-	-	0.0	0.0	5.3	-	-	2.6	9.5	0.0	-	-	2.2	2.0
Articulated Trucks	0	0	0	-	0	0	2	0	-	2	0	0	0	-	0	2
% Articulated Trucks	0.0	0.0	-	-	0.0	0.0	2.7	-	-	1.3	0.0	0.0	-	-	0.0	0.5
Bicycles on Road	0	0	0	-	0	0	0	0	-	0	0	0	0	-	0	0
% Bicycles on Road	0.0	0.0	-	-	0.0	0.0	0.0	-	-	0.0	0.0	0.0	-	-	0.0	0.0
Bicycles on Crosswalk	-	-	-	0	-	-	-	-	0	-	-	-	-	0	-	-
% Bicycles on Crosswalk	-	-	-	-	-	-	-	-	-	-	-	-	-	-	-	-
Pedestrians	-	-	-	0	-	-	-	-	0	-	-	-	-	0	-	-
% Pedestrians	-	-	-	-	-	-	-	-	-	-	-	-	-	-	-	-

Paradigm Transportation Solutions Limited
5A-150 Pinebush Rd

Cambridge, Ontario, Canada N1R 8J8
519-896-3163 cbowness@ptsl.com

Count Name: 8th Street & 28th Avenue
Site Code: 230607
Start Date: 11/14/2023

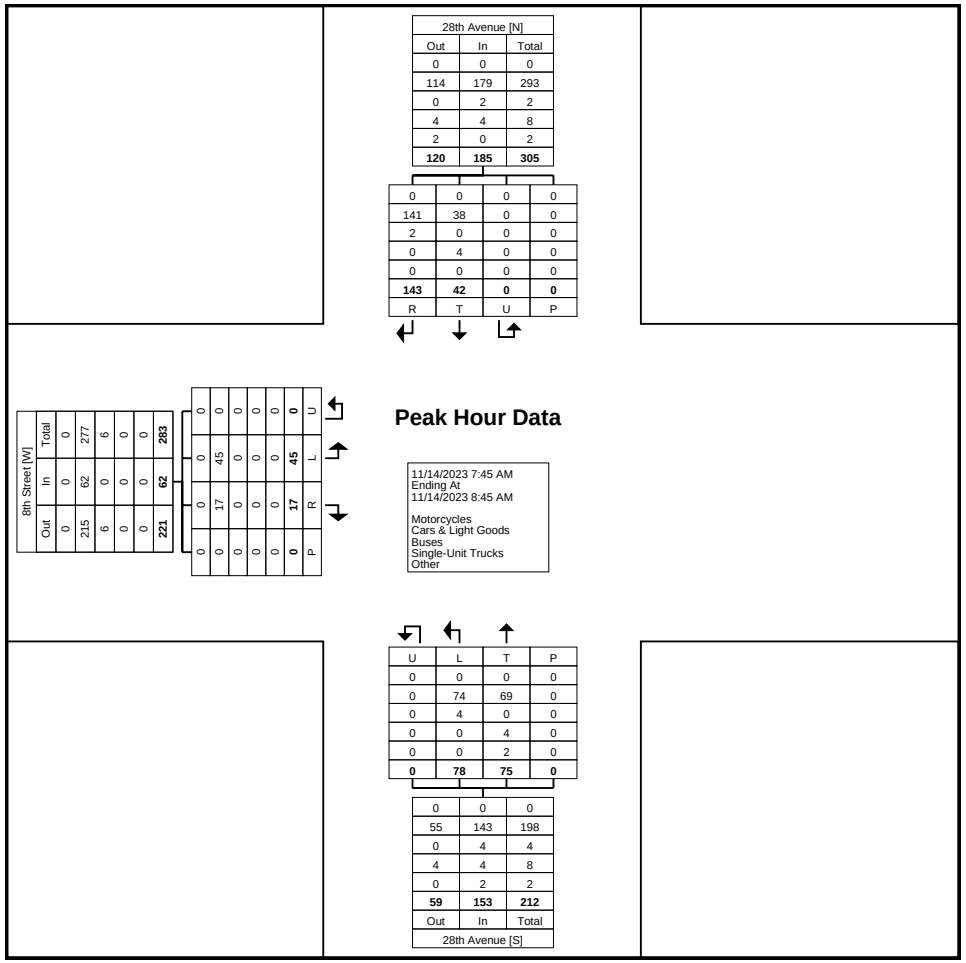

Turning Movement Peak Hour Data Plot (7:45 AM)

Paradigm Transportation Solutions Limited
5A-150 Pinebush Rd

Cambridge, Ontario, Canada N1R 8J8
519-896-3163 cbowness@ptsl.com

Count Name: 8th Street & 28th Avenue
Site Code: 230607
Start Date: 11/14/2023

Turning Movement Peak Hour Data (12:15 PM)

Start Time	8th Street Eastbound					28th Avenue Northbound					28th Avenue Southbound					
	Left	Right	U-Turn	Peds	App. Total	Left	Thru	U-Turn	Peds	App. Total	Thru	Right	U-Turn	Peds	App. Total	Int. Total
12:15 PM	15	4	0	0	19	3	18	0	0	21	31	21	0	0	52	92
12:30 PM	13	8	0	0	21	6	11	0	0	17	11	25	0	0	36	74
12:45 PM	21	7	0	0	28	7	13	0	0	20	25	18	0	0	43	91
1:00 PM	15	5	0	0	20	9	22	0	0	31	12	22	0	0	34	85
Total	64	24	0	0	88	25	64	0	0	89	79	86	0	0	165	342
Approach %	72.7	27.3	0.0	-	-	28.1	71.9	0.0	-	-	47.9	52.1	0.0	-	-	-
Total %	18.7	7.0	0.0	-	25.7	7.3	18.7	0.0	-	26.0	23.1	25.1	0.0	-	48.2	-
PHF	0.762	0.750	0.000	-	0.786	0.694	0.727	0.000	-	0.718	0.637	0.860	0.000	-	0.793	0.929
Motorcycles	0	0	0	-	0	0	0	0	-	0	1	0	0	-	1	1
% Motorcycles	0.0	0.0	-	-	0.0	0.0	0.0	-	-	0.0	1.3	0.0	-	-	0.6	0.3
Cars & Light Goods	63	24	0	-	87	25	60	0	-	85	73	81	0	-	154	326
% Cars & Light Goods	98.4	100.0	-	-	98.9	100.0	93.8	-	-	95.5	92.4	94.2	-	-	93.3	95.3
Buses	0	0	0	-	0	0	0	0	-	0	0	0	0	-	0	0
% Buses	0.0	0.0	-	-	0.0	0.0	0.0	-	-	0.0	0.0	0.0	-	-	0.0	0.0
Single-Unit Trucks	1	0	0	-	1	0	4	0	-	4	3	4	0	-	7	12
% Single-Unit Trucks	1.6	0.0	-	-	1.1	0.0	6.3	-	-	4.5	3.8	4.7	-	-	4.2	3.5
Articulated Trucks	0	0	0	-	0	0	0	0	-	0	2	1	0	-	3	3
% Articulated Trucks	0.0	0.0	-	-	0.0	0.0	0.0	-	-	0.0	2.5	1.2	-	-	1.8	0.9
Bicycles on Road	0	0	0	-	0	0	0	0	-	0	0	0	0	-	0	0
% Bicycles on Road	0.0	0.0	-	-	0.0	0.0	0.0	-	-	0.0	0.0	0.0	-	-	0.0	0.0
Bicycles on Crosswalk	-	-	-	0	-	-	-	-	0	-	-	-	-	0	-	-
% Bicycles on Crosswalk	-	-	-	-	-	-	-	-	-	-	-	-	-	-	-	-
Pedestrians	-	-	-	0	-	-	-	-	0	-	-	-	-	0	-	-
% Pedestrians	-	-	-	-	-	-	-	-	-	-	-	-	-	-	-	-

Paradigm Transportation Solutions Limited
5A-150 Pinebush Rd

Cambridge, Ontario, Canada N1R 8J8
519-896-3163 cbowness@ptsl.com

Count Name: 8th Street & 28th Avenue
Site Code: 230607
Start Date: 11/14/2023

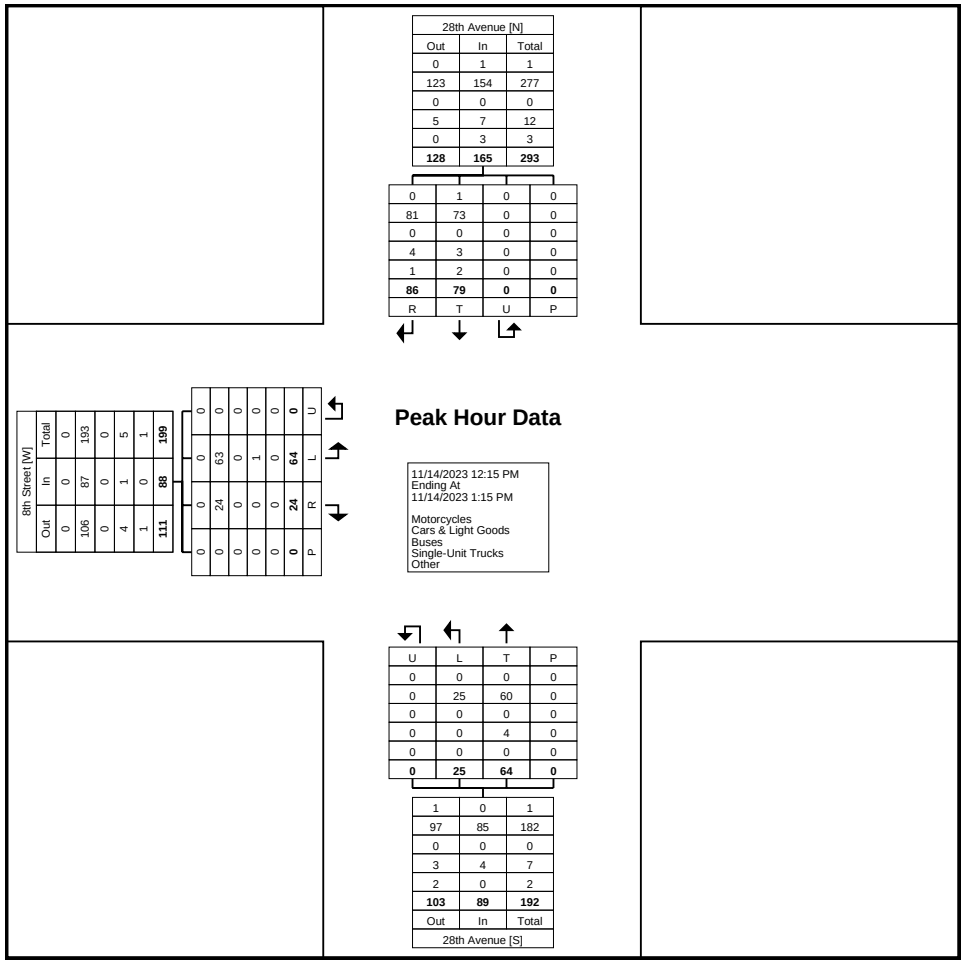

Turning Movement Peak Hour Data Plot (12:15 PM)

Paradigm Transportation Solutions Limited
5A-150 Pinebush Rd

Cambridge, Ontario, Canada N1R 8J8
519-896-3163 cbowness@ptsl.com

Count Name: 8th Street & 28th Avenue
Site Code: 230607
Start Date: 11/14/2023

Turning Movement Peak Hour Data (4:00 PM)

Start Time	8th Street Eastbound					28th Avenue Northbound					28th Avenue Southbound					
	Left	Right	U-Turn	Peds	App. Total	Left	Thru	U-Turn	Peds	App. Total	Thru	Right	U-Turn	Peds	App. Total	Int. Total
4:00 PM	46	17	0	0	63	3	13	0	0	16	22	24	0	0	46	125
4:15 PM	29	8	0	0	37	10	9	0	0	19	22	23	0	0	45	101
4:30 PM	31	16	0	0	47	8	14	0	0	22	24	26	0	0	50	119
4:45 PM	27	5	0	0	32	4	21	0	0	25	22	16	0	0	38	95
Total	133	46	0	0	179	25	57	0	0	82	90	89	0	0	179	440
Approach %	74.3	25.7	0.0	-	-	30.5	69.5	0.0	-	-	50.3	49.7	0.0	-	-	-
Total %	30.2	10.5	0.0	-	40.7	5.7	13.0	0.0	-	18.6	20.5	20.2	0.0	-	40.7	-
PHF	0.723	0.676	0.000	-	0.710	0.625	0.679	0.000	-	0.820	0.938	0.856	0.000	-	0.895	0.880
Motorcycles	0	0	0	-	0	0	0	0	-	0	0	0	0	-	0	0
% Motorcycles	0.0	0.0	-	-	0.0	0.0	0.0	-	-	0.0	0.0	0.0	-	-	0.0	0.0
Cars & Light Goods	133	46	0	-	179	25	49	0	-	74	88	88	0	-	176	429
% Cars & Light Goods	100.0	100.0	-	-	100.0	100.0	86.0	-	-	90.2	97.8	98.9	-	-	98.3	97.5
Buses	0	0	0	-	0	0	2	0	-	2	0	0	0	-	0	2
% Buses	0.0	0.0	-	-	0.0	0.0	3.5	-	-	2.4	0.0	0.0	-	-	0.0	0.5
Single-Unit Trucks	0	0	0	-	0	0	2	0	-	2	2	1	0	-	3	5
% Single-Unit Trucks	0.0	0.0	-	-	0.0	0.0	3.5	-	-	2.4	2.2	1.1	-	-	1.7	1.1
Articulated Trucks	0	0	0	-	0	0	4	0	-	4	0	0	0	-	0	4
% Articulated Trucks	0.0	0.0	-	-	0.0	0.0	7.0	-	-	4.9	0.0	0.0	-	-	0.0	0.9
Bicycles on Road	0	0	0	-	0	0	0	0	-	0	0	0	0	-	0	0
% Bicycles on Road	0.0	0.0	-	-	0.0	0.0	0.0	-	-	0.0	0.0	0.0	-	-	0.0	0.0
Bicycles on Crosswalk	-	-	-	0	-	-	-	-	0	-	-	-	-	0	-	-
% Bicycles on Crosswalk	-	-	-	-	-	-	-	-	-	-	-	-	-	-	-	-
Pedestrians	-	-	-	0	-	-	-	-	0	-	-	-	-	0	-	-
% Pedestrians	-	-	-	-	-	-	-	-	-	-	-	-	-	-	-	-

Paradigm Transportation Solutions Limited
5A-150 Pinebush Rd

Cambridge, Ontario, Canada N1R 8J8
519-896-3163 cbowness@ptsl.com

Count Name: 8th Street & 28th Avenue
Site Code: 230607
Start Date: 11/14/2023

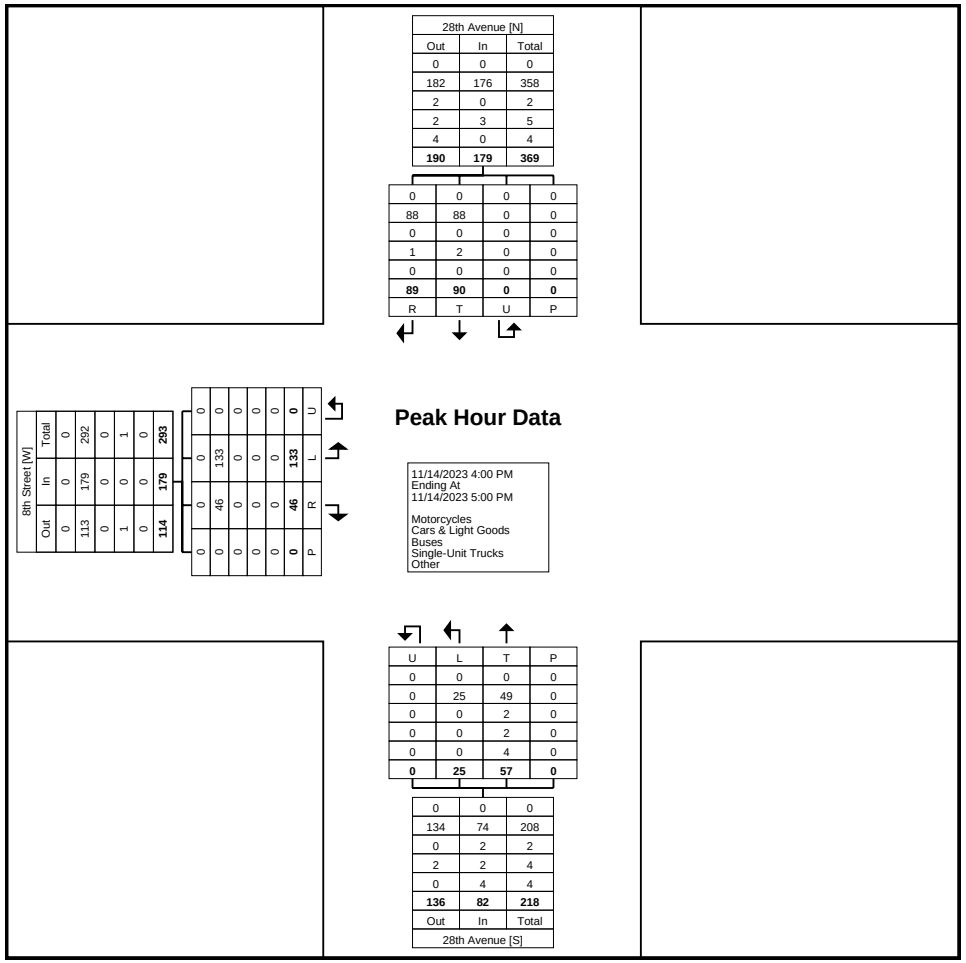

Turning Movement Peak Hour Data Plot (4:00 PM)

Paradigm Transportation Solutions Limited
5A-150 Pinebush Rd

Cambridge, Ontario, Canada N1R 8J8
519-896-3163 cbowness@ptsl.com

Count Name: 16th Street & 28th Avenue
Site Code: 230607
Start Date: 11/14/2023

Turning Movement Data

Start Time	16th Street Eastbound						16th Street Westbound						28th Avenue Northbound						28th Avenue Southbound						
	Left	Thru	Right	U-Turn	Peds	App. Total	Left	Thru	Right	U-Turn	Peds	App. Total	Left	Thru	Right	U-Turn	Peds	App. Total	Left	Thru	Right	U-Turn	Peds	App. Total	Int. Total
7:00 AM	3	28	0	0	0	31	11	24	9	0	0	44	3	7	14	0	0	24	7	7	8	0	0	22	121
7:15 AM	3	41	1	0	0	45	22	40	6	0	0	68	2	3	14	0	0	19	6	2	6	0	0	14	146
7:30 AM	1	46	1	0	0	48	35	39	10	0	0	84	3	6	15	0	0	24	10	2	2	0	0	14	170
7:45 AM	5	36	5	0	0	46	43	63	16	0	0	122	5	15	14	0	0	34	13	2	1	0	0	16	218
Hourly Total	12	151	7	0	0	170	111	166	41	0	0	318	13	31	57	0	0	101	36	13	17	0	0	66	655
8:00 AM	3	35	2	0	0	40	36	56	10	0	0	102	5	9	18	0	0	32	14	3	6	0	0	23	197
8:15 AM	6	27	1	0	0	34	34	61	12	0	0	107	7	12	14	0	0	33	9	8	1	0	0	18	192
8:30 AM	0	36	2	0	0	38	45	70	4	0	0	119	3	6	11	0	0	20	3	3	2	0	0	8	185
8:45 AM	3	45	6	0	0	54	29	48	7	0	0	84	9	13	12	0	0	34	7	4	2	0	0	13	185
Hourly Total	12	143	11	0	0	166	144	235	33	0	0	412	24	40	55	0	0	119	33	18	11	0	0	62	759
9:00 AM	1	38	4	0	0	43	26	56	10	0	0	92	5	5	8	0	0	18	7	5	2	0	0	14	167
9:15 AM	3	42	5	0	0	50	25	48	7	0	0	80	3	5	8	0	0	16	4	2	6	0	0	12	158
9:30 AM	3	49	7	0	0	59	14	40	9	0	0	63	3	8	9	0	0	20	9	1	6	0	0	16	158
9:45 AM	2	39	4	0	0	45	13	50	7	0	0	70	6	3	11	0	0	20	7	3	5	0	0	15	150
Hourly Total	9	168	20	0	0	197	78	194	33	0	0	305	17	21	36	0	0	74	27	11	19	0	0	57	633
*** BREAK ***	-	-	-	-	-	-	-	-	-	-	-	-	-	-	-	-	-	-	-	-	-	-	-	-	-
11:30 AM	4	63	14	0	0	81	15	47	8	0	0	70	6	5	10	0	0	21	11	8	4	0	0	23	195
11:45 AM	6	47	11	0	0	64	11	38	9	0	0	58	9	8	12	0	0	29	5	3	7	0	0	15	166
Hourly Total	10	110	25	0	0	145	26	85	17	0	0	128	15	13	22	0	0	50	16	11	11	0	0	38	361
12:00 PM	8	53	14	0	0	75	12	52	5	0	0	69	12	4	11	0	0	27	3	11	10	0	0	24	195
12:15 PM	6	60	17	0	0	83	22	53	7	0	0	82	9	7	14	0	0	30	5	11	8	0	0	24	219
12:30 PM	2	62	12	0	0	76	19	47	5	0	0	71	6	11	11	0	0	28	5	6	7	0	0	18	193
12:45 PM	6	57	17	0	0	80	19	56	12	0	0	87	8	5	17	0	0	30	8	4	5	0	0	17	214
Hourly Total	22	232	60	0	0	314	72	208	29	0	0	309	35	27	53	0	0	115	21	32	30	0	0	83	821
1:00 PM	5	62	7	0	0	74	22	48	6	0	0	76	16	7	15	0	0	38	5	7	7	0	0	19	207
1:15 PM	2	62	9	0	0	73	13	46	8	0	0	67	4	12	12	0	0	28	3	6	8	0	0	17	185
*** BREAK ***	-	-	-	-	-	-	-	-	-	-	-	-	-	-	-	-	-	-	-	-	-	-	-	-	-
Hourly Total	7	124	16	0	0	147	35	94	14	0	0	143	20	19	27	0	0	66	8	13	15	0	0	36	392
3:00 PM	3	67	17	0	0	87	25	60	6	0	0	91	4	12	27	0	0	43	5	6	5	0	0	16	237
3:15 PM	3	75	7	0	0	85	15	44	13	0	0	72	5	16	19	0	0	40	11	6	4	0	0	21	218
3:30 PM	5	73	10	0	0	88	9	49	8	0	0	66	5	11	27	0	1	43	16	11	9	0	0	36	233
3:45 PM	5	55	10	0	0	70	17	47	6	0	0	70	2	6	16	0	0	24	7	11	8	0	0	26	190
Hourly Total	16	270	44	0	0	330	66	200	33	0	0	299	16	45	89	0	1	150	39	34	26	0	0	99	878
4:00 PM	5	87	8	0	0	100	24	51	17	0	0	92	3	12	41	0	0	56	5	11	10	0	0	26	274
4:15 PM	0	66	10	0	0	76	19	49	15	0	0	83	8	11	21	0	0	40	15	14	7	0	0	36	235

4:30 PM	3	73	12	0	0	88	27	62	6	0	0	95	6	7	29	0	0	42	4	12	9	0	0	25	250
4:45 PM	1	72	14	0	0	87	12	53	11	0	0	76	7	17	29	0	0	53	7	13	5	0	0	25	241
Hourly Total	9	298	44	0	0	351	82	215	49	0	0	346	24	47	120	0	0	191	31	50	31	0	0	112	1000
5:00 PM	6	75	11	0	0	92	17	53	9	0	0	79	9	10	29	0	0	48	7	13	7	0	0	27	246
5:15 PM	6	75	20	0	0	101	23	54	4	0	0	81	5	6	22	0	0	33	5	11	8	0	0	24	239
5:30 PM	0	59	5	0	0	64	12	45	2	0	0	59	5	3	10	0	0	18	8	7	2	0	0	17	158
5:45 PM	0	38	11	0	0	49	12	52	1	0	0	65	3	5	11	0	0	19	2	2	1	0	0	5	138
Hourly Total	12	247	47	0	0	306	64	204	16	0	0	284	22	24	72	0	0	118	22	33	18	0	0	73	781
Grand Total	109	1743	274	0	0	2126	678	1601	265	0	0	2544	186	267	531	0	1	984	233	215	178	0	0	626	6280
Approach %	5.1	82.0	12.9	0.0	-	-	26.7	62.9	10.4	0.0	-	-	18.9	27.1	54.0	0.0	-	-	37.2	34.3	28.4	0.0	-	-	-
Total %	1.7	27.8	4.4	0.0	-	33.9	10.8	25.5	4.2	0.0	-	40.5	3.0	4.3	8.5	0.0	-	15.7	3.7	3.4	2.8	0.0	-	10.0	-
Motorcycles	0	2	0	0	-	2	0	0	1	0	-	1	0	0	0	0	-	0	0	1	0	0	-	1	4
% Motorcycles	0.0	0.1	0.0	-	-	0.1	0.0	0.0	0.4	-	-	0.0	0.0	0.0	0.0	-	-	0.0	0.0	0.5	0.0	-	-	0.2	0.1
Cars & Light Goods	105	1674	267	0	-	2046	653	1506	198	0	-	2357	180	230	516	0	-	926	186	191	165	0	-	542	5871
% Cars & Light Goods	96.3	96.0	97.4	-	-	96.2	96.3	94.1	74.7	-	-	92.6	96.8	86.1	97.2	-	-	94.1	79.8	88.8	92.7	-	-	86.6	93.5
Buses	0	5	0	0	-	5	1	14	14	0	-	29	0	5	3	0	-	8	11	2	2	0	-	15	57
% Buses	0.0	0.3	0.0	-	-	0.2	0.1	0.9	5.3	-	-	1.1	0.0	1.9	0.6	-	-	0.8	4.7	0.9	1.1	-	-	2.4	0.9
Single-Unit Trucks	3	49	4	0	-	56	17	58	45	0	-	120	5	20	5	0	-	30	29	15	7	0	-	51	257
% Single-Unit Trucks	2.8	2.8	1.5	-	-	2.6	2.5	3.6	17.0	-	-	4.7	2.7	7.5	0.9	-	-	3.0	12.4	7.0	3.9	-	-	8.1	4.1
Articulated Trucks	1	12	2	0	-	15	7	22	7	0	-	36	1	12	7	0	-	20	7	6	4	0	-	17	88
% Articulated Trucks	0.9	0.7	0.7	-	-	0.7	1.0	1.4	2.6	-	-	1.4	0.5	4.5	1.3	-	-	2.0	3.0	2.8	2.2	-	-	2.7	1.4
Bicycles on Road	0	1	1	0	-	2	0	1	0	0	-	1	0	0	0	0	-	0	0	0	0	0	-	0	3
% Bicycles on Road	0.0	0.1	0.4	-	-	0.1	0.0	0.1	0.0	-	-	0.0	0.0	0.0	0.0	-	-	0.0	0.0	0.0	0.0	-	-	0.0	0.0
Bicycles on Crosswalk	-	-	-	-	0	-	-	-	-	-	0	-	-	-	-	-	1	-	-	-	-	-	0	-	-
% Bicycles on Crosswalk	-	-	-	-	-	-	-	-	-	-	-	-	-	-	-	-	100.0	-	-	-	-	-	-	-	-
Pedestrians	-	-	-	-	0	-	-	-	-	-	0	-	-	-	-	-	0	-	-	-	-	-	0	-	-
% Pedestrians	-	-	-	-	-	-	-	-	-	-	-	-	-	-	-	-	0.0	-	-	-	-	-	-	-	-

Paradigm Transportation Solutions Limited
5A-150 Pinebush Rd

Cambridge, Ontario, Canada N1R 8J8
519-896-3163 cbowness@ptsl.com

Count Name: 16th Street & 28th Avenue
Site Code: 230607
Start Date: 11/14/2023

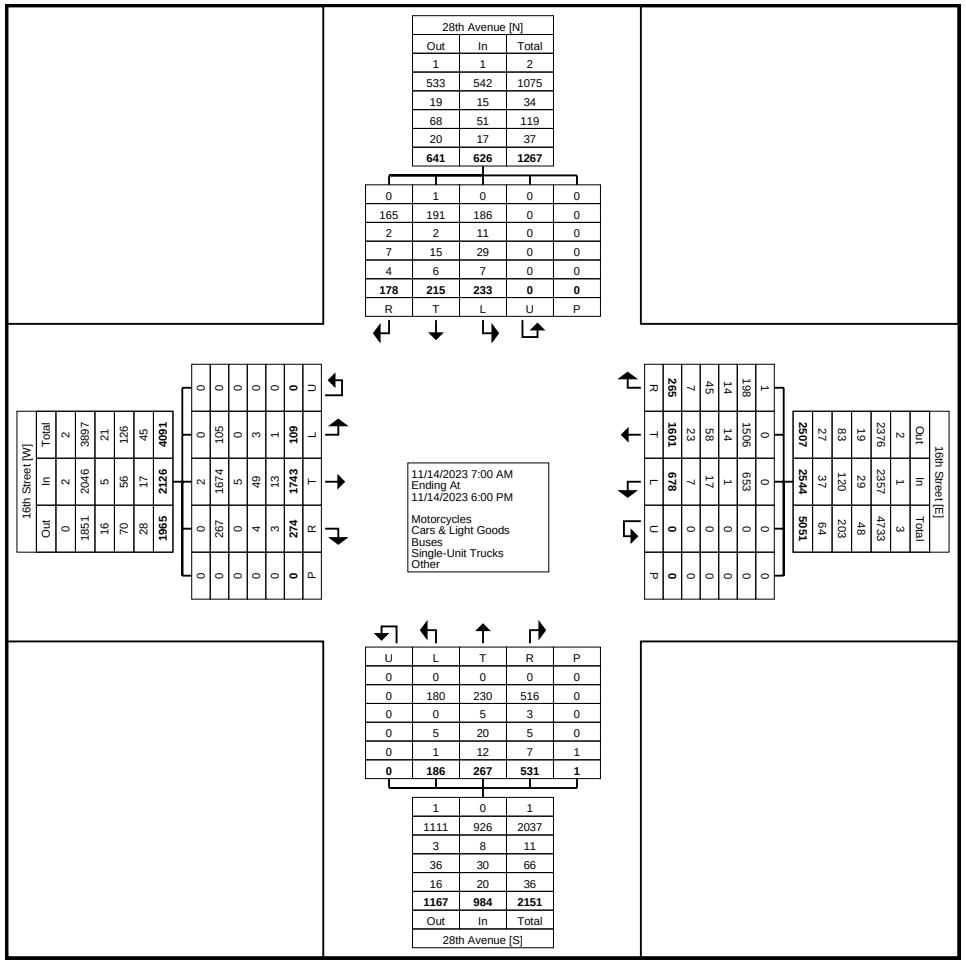

Turning Movement Data Plot

Paradigm Transportation Solutions Limited
5A-150 Pinebush Rd

Cambridge, Ontario, Canada N1R 8J8
519-896-3163 cbowness@ptsl.com

Count Name: 16th Street & 28th Avenue
Site Code: 230607
Start Date: 11/14/2023

Turning Movement Peak Hour Data (7:45 AM)

Start Time	16th Street Eastbound						16th Street Westbound						28th Avenue Northbound						28th Avenue Southbound						
	Left	Thru	Right	U-Turn	Peds	App. Total	Left	Thru	Right	U-Turn	Peds	App. Total	Left	Thru	Right	U-Turn	Peds	App. Total	Left	Thru	Right	U-Turn	Peds	App. Total	Int. Total
7:45 AM	5	36	5	0	0	46	43	63	16	0	0	122	5	15	14	0	0	34	13	2	1	0	0	16	218
8:00 AM	3	35	2	0	0	40	36	56	10	0	0	102	5	9	18	0	0	32	14	3	6	0	0	23	197
8:15 AM	6	27	1	0	0	34	34	61	12	0	0	107	7	12	14	0	0	33	9	8	1	0	0	18	192
8:30 AM	0	36	2	0	0	38	45	70	4	0	0	119	3	6	11	0	0	20	3	3	2	0	0	8	185
Total	14	134	10	0	0	158	158	250	42	0	0	450	20	42	57	0	0	119	39	16	10	0	0	65	792
Approach %	8.9	84.8	6.3	0.0	-	-	35.1	55.6	9.3	0.0	-	-	16.8	35.3	47.9	0.0	-	-	60.0	24.6	15.4	0.0	-	-	-
Total %	1.8	16.9	1.3	0.0	-	19.9	19.9	31.6	5.3	0.0	-	56.8	2.5	5.3	7.2	0.0	-	15.0	4.9	2.0	1.3	0.0	-	8.2	-
PHF	0.583	0.931	0.500	0.000	-	0.859	0.878	0.893	0.656	0.000	-	0.922	0.714	0.700	0.792	0.000	-	0.875	0.696	0.500	0.417	0.000	-	0.707	0.908
Motorcycles	0	0	0	0	-	0	0	0	0	0	-	0	0	0	0	0	-	0	0	0	0	0	-	0	0
% Motorcycles	0.0	0.0	0.0	-	-	0.0	0.0	0.0	0.0	-	-	0.0	0.0	0.0	0.0	-	-	0.0	0.0	0.0	0.0	-	-	0.0	0.0
Cars & Light Goods	14	127	9	0	-	150	157	240	31	0	-	428	18	39	56	0	-	113	31	13	9	0	-	53	744
% Cars & Light Goods	100.0	94.8	90.0	-	-	94.9	99.4	96.0	73.8	-	-	95.1	90.0	92.9	98.2	-	-	95.0	79.5	81.3	90.0	-	-	81.5	93.9
Buses	0	0	0	0	-	0	1	2	5	0	-	8	0	0	0	0	-	0	1	1	0	0	-	2	10
% Buses	0.0	0.0	0.0	-	-	0.0	0.6	0.8	11.9	-	-	1.8	0.0	0.0	0.0	-	-	0.0	2.6	6.3	0.0	-	-	3.1	1.3
Single-Unit Trucks	0	6	1	0	-	7	0	7	5	0	-	12	1	3	0	0	-	4	6	2	1	0	-	9	32
% Single-Unit Trucks	0.0	4.5	10.0	-	-	4.4	0.0	2.8	11.9	-	-	2.7	5.0	7.1	0.0	-	-	3.4	15.4	12.5	10.0	-	-	13.8	4.0
Articulated Trucks	0	1	0	0	-	1	0	1	1	0	-	2	1	0	1	0	-	2	1	0	0	0	-	1	6
% Articulated Trucks	0.0	0.7	0.0	-	-	0.6	0.0	0.4	2.4	-	-	0.4	5.0	0.0	1.8	-	-	1.7	2.6	0.0	0.0	-	-	1.5	0.8
Bicycles on Road	0	0	0	0	-	0	0	0	0	0	-	0	0	0	0	0	-	0	0	0	0	0	-	0	0
% Bicycles on Road	0.0	0.0	0.0	-	-	0.0	0.0	0.0	0.0	-	-	0.0	0.0	0.0	0.0	-	-	0.0	0.0	0.0	0.0	-	-	0.0	0.0
Bicycles on Crosswalk	-	-	-	-	0	-	-	-	-	-	0	-	-	-	-	-	0	-	-	-	-	-	0	-	-
% Bicycles on Crosswalk	-	-	-	-	-	-	-	-	-	-	-	-	-	-	-	-	-	-	-	-	-	-	-	-	-
Pedestrians	-	-	-	-	0	-	-	-	-	-	0	-	-	-	-	-	0	-	-	-	-	-	0	-	-
% Pedestrians	-	-	-	-	-	-	-	-	-	-	-	-	-	-	-	-	-	-	-	-	-	-	-	-	-

paradigm

Paradigm Transportation Solutions Limited
5A-150 Pinebush Rd

Cambridge, Ontario, Canada N1R 8J8
519-896-3163 cbowness@ptsl.com

Count Name: 16th Street & 28th Avenue
Site Code: 230607
Start Date: 11/14/2023
Page No: 5

Peak Hour Data

11/14/2023 7:45 AM
Ending At
11/14/2023 8:45 AM

Motorcycles
Cars & Light Goods
Buses
Single-Unit Trucks
Other

28th Avenue [N]

	Out	In	Total
Motorcycles	0	0	0
Cars & Light Goods	84	53	137
Buses	5	2	7
Single-Unit Trucks	8	9	17
Other	1	1	2
Total	**98**	**65**	**163**

	R	T	L	U	P
Motorcycles	0	0	0	0	0
Cars & Light Goods	9	13	31	0	0
Buses	0	1	1	0	0
Single-Unit Trucks	1	2	6	0	0
Other	0	0	1	0	0
Total	**10**	**16**	**39**	**0**	**0**

16th Street [W]

	Out	In	Total
Motorcycles	0	0	0
Cars & Light Goods	267	150	417
Buses	2	0	2
Single-Unit Trucks	9	7	16
Other	2	1	3
Total	**280**	**158**	**438**

	U	L	T	R	P
Motorcycles	0	0	0	0	0
Cars & Light Goods	0	14	127	9	0
Buses	0	0	0	0	0
Single-Unit Trucks	0	0	6	1	0
Other	0	0	1	0	0
Total	**0**	**14**	**134**	**10**	**0**

16th Street [E]

	Out	In	Total
Motorcycles	0	0	0
Cars & Light Goods	214	428	642
Buses	1	8	9
Single-Unit Trucks	12	12	24
Other	3	2	5
Total	**230**	**450**	**680**

	R	T	L	U	P
Motorcycles	0	0	0	0	0
Cars & Light Goods	31	240	157	0	0
Buses	5	2	1	0	0
Single-Unit Trucks	5	7	0	0	0
Other	1	1	0	0	0
Total	**42**	**250**	**158**	**0**	**0**

28th Avenue [S]

	U	L	T	R	P
Motorcycles	0	0	0	0	0
Cars & Light Goods	0	18	39	56	0
Buses	0	0	0	0	0
Single-Unit Trucks	0	1	3	0	0
Other	0	1	0	1	0
Total	**0**	**20**	**42**	**57**	**0**

	Out	In	Total
Motorcycles	0	0	0
Cars & Light Goods	179	113	292
Buses	2	0	2
Single-Unit Trucks	3	4	7
Other	0	2	2
Total	**184**	**119**	**303**

Turning Movement Peak Hour Data Plot (7:45 AM)

Paradigm Transportation Solutions Limited
5A-150 Pinebush Rd

Cambridge, Ontario, Canada N1R 8J8
519-896-3163 cbowness@ptsl.com

Count Name: 16th Street & 28th Avenue
Site Code: 230607
Start Date: 11/14/2023

Turning Movement Peak Hour Data (12:15 PM)

Start Time	16th Street Eastbound						16th Street Westbound						28th Avenue Northbound						28th Avenue Southbound						
	Left	Thru	Right	U-Turn	Peds	App. Total	Left	Thru	Right	U-Turn	Peds	App. Total	Left	Thru	Right	U-Turn	Peds	App. Total	Left	Thru	Right	U-Turn	Peds	App. Total	Int. Total
12:15 PM	6	60	17	0	0	83	22	53	7	0	0	82	9	7	14	0	0	30	5	11	8	0	0	24	219
12:30 PM	2	62	12	0	0	76	19	47	5	0	0	71	6	11	11	0	0	28	5	6	7	0	0	18	193
12:45 PM	6	57	17	0	0	80	19	56	12	0	0	87	8	5	17	0	0	30	8	4	5	0	0	17	214
1:00 PM	5	62	7	0	0	74	22	48	6	0	0	76	16	7	15	0	0	38	5	7	7	0	0	19	207
Total	19	241	53	0	0	313	82	204	30	0	0	316	39	30	57	0	0	126	23	28	27	0	0	78	833
Approach %	6.1	77.0	16.9	0.0	-	-	25.9	64.6	9.5	0.0	-	-	31.0	23.8	45.2	0.0	-	-	29.5	35.9	34.6	0.0	-	-	-
Total %	2.3	28.9	6.4	0.0	-	37.6	9.8	24.5	3.6	0.0	-	37.9	4.7	3.6	6.8	0.0	-	15.1	2.8	3.4	3.2	0.0	-	9.4	-
PHF	0.792	0.972	0.779	0.000	-	0.943	0.932	0.911	0.625	0.000	-	0.908	0.609	0.682	0.838	0.000	-	0.829	0.719	0.636	0.844	0.000	-	0.813	0.951
Motorcycles	0	0	0	0	-	0	0	0	1	0	-	1	0	0	0	0	-	0	0	1	0	0	-	1	2
% Motorcycles	0.0	0.0	0.0	-	-	0.0	0.0	0.0	3.3	-	-	0.3	0.0	0.0	0.0	-	-	0.0	0.0	3.6	0.0	-	-	1.3	0.2
Cars & Light Goods	18	232	52	0	-	302	76	193	18	0	-	287	39	27	55	0	-	121	20	24	25	0	-	69	779
% Cars & Light Goods	94.7	96.3	98.1	-	-	96.5	92.7	94.6	60.0	-	-	90.8	100.0	90.0	96.5	-	-	96.0	87.0	85.7	92.6	-	-	88.5	93.5
Buses	0	1	0	0	-	1	0	0	0	0	-	0	0	0	0	0	-	0	0	0	0	0	-	0	1
% Buses	0.0	0.4	0.0	-	-	0.3	0.0	0.0	0.0	-	-	0.0	0.0	0.0	0.0	-	-	0.0	0.0	0.0	0.0	-	-	0.0	0.1
Single-Unit Trucks	1	5	1	0	-	7	5	5	10	0	-	20	0	2	1	0	-	3	2	2	1	0	-	5	35
% Single-Unit Trucks	5.3	2.1	1.9	-	-	2.2	6.1	2.5	33.3	-	-	6.3	0.0	6.7	1.8	-	-	2.4	8.7	7.1	3.7	-	-	6.4	4.2
Articulated Trucks	0	3	0	0	-	3	1	6	1	0	-	8	0	1	1	0	-	2	1	1	1	0	-	3	16
% Articulated Trucks	0.0	1.2	0.0	-	-	1.0	1.2	2.9	3.3	-	-	2.5	0.0	3.3	1.8	-	-	1.6	4.3	3.6	3.7	-	-	3.8	1.9
Bicycles on Road	0	0	0	0	-	0	0	0	0	0	-	0	0	0	0	0	-	0	0	0	0	0	-	0	0
% Bicycles on Road	0.0	0.0	0.0	-	-	0.0	0.0	0.0	0.0	-	-	0.0	0.0	0.0	0.0	-	-	0.0	0.0	0.0	0.0	-	-	0.0	0.0
Bicycles on Crosswalk	-	-	-	-	0	-	-	-	-	-	0	-	-	-	-	-	0	-	-	-	-	-	0	-	-
% Bicycles on Crosswalk	-	-	-	-	-	-	-	-	-	-	-	-	-	-	-	-	-	-	-	-	-	-	-	-	-
Pedestrians	-	-	-	-	0	-	-	-	-	-	0	-	-	-	-	-	0	-	-	-	-	-	0	-	-
% Pedestrians	-	-	-	-	-	-	-	-	-	-	-	-	-	-	-	-	-	-	-	-	-	-	-	-	-

Paradigm Transportation Solutions Limited
5A-150 Pinebush Rd

Cambridge, Ontario, Canada N1R 8J8
519-896-3163 cbowness@ptsl.com

Count Name: 16th Street & 28th Avenue
Site Code: 230607
Start Date: 11/14/2023

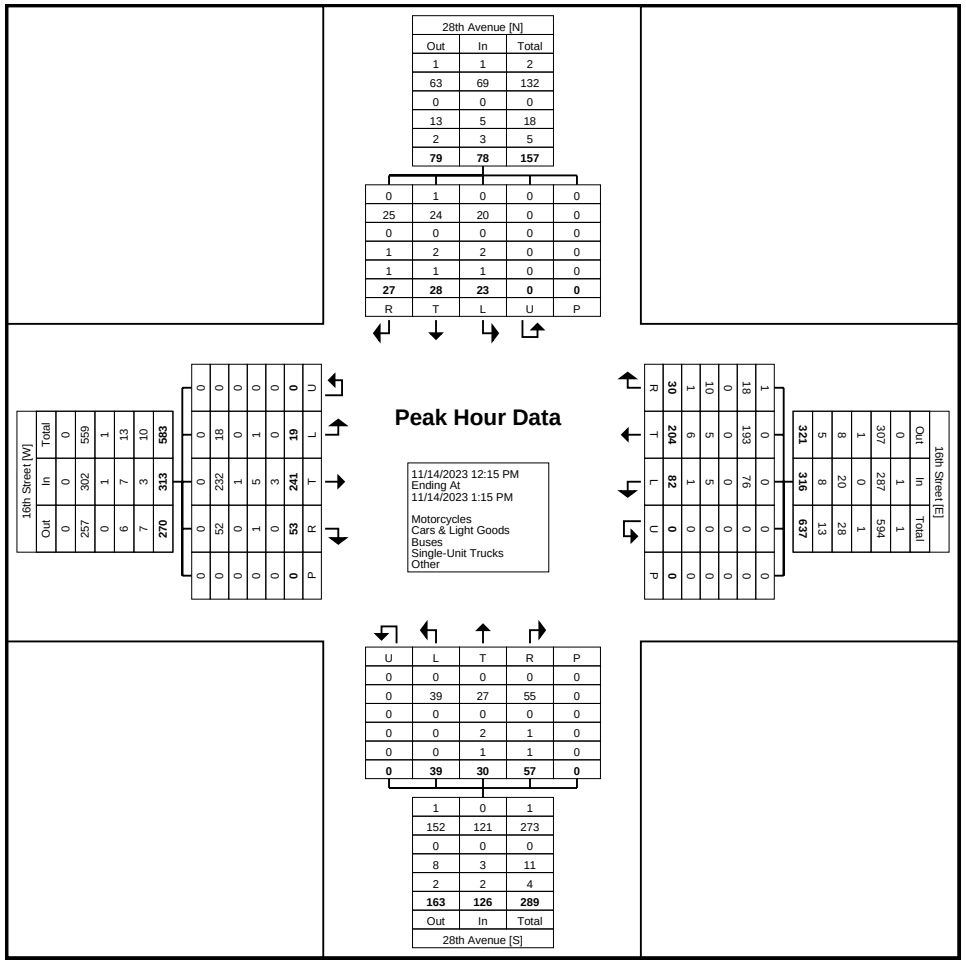

Turning Movement Peak Hour Data Plot (12:15 PM)

Paradigm Transportation Solutions Limited
5A-150 Pinebush Rd

Cambridge, Ontario, Canada N1R 8J8
519-896-3163 cbowness@ptsl.com

Count Name: 16th Street & 28th Avenue
Site Code: 230607
Start Date: 11/14/2023

Turning Movement Peak Hour Data (4:00 PM)

Start Time	16th Street Eastbound						16th Street Westbound						28th Avenue Northbound						28th Avenue Southbound						
	Left	Thru	Right	U-Turn	Peds	App. Total	Left	Thru	Right	U-Turn	Peds	App. Total	Left	Thru	Right	U-Turn	Peds	App. Total	Left	Thru	Right	U-Turn	Peds	App. Total	Int. Total
4:00 PM	5	87	8	0	0	100	24	51	17	0	0	92	3	12	41	0	0	56	5	11	10	0	0	26	274
4:15 PM	0	66	10	0	0	76	19	49	15	0	0	83	8	11	21	0	0	40	15	14	7	0	0	36	235
4:30 PM	3	73	12	0	0	88	27	62	6	0	0	95	6	7	29	0	0	42	4	12	9	0	0	25	250
4:45 PM	1	72	14	0	0	87	12	53	11	0	0	76	7	17	29	0	0	53	7	13	5	0	0	25	241
Total	9	298	44	0	0	351	82	215	49	0	0	346	24	47	120	0	0	191	31	50	31	0	0	112	1000
Approach %	2.6	84.9	12.5	0.0	-	-	23.7	62.1	14.2	0.0	-	-	12.6	24.6	62.8	0.0	-	-	27.7	44.6	27.7	0.0	-	-	-
Total %	0.9	29.8	4.4	0.0	-	35.1	8.2	21.5	4.9	0.0	-	34.6	2.4	4.7	12.0	0.0	-	19.1	3.1	5.0	3.1	0.0	-	11.2	-
PHF	0.450	0.856	0.786	0.000	-	0.878	0.759	0.867	0.721	0.000	-	0.911	0.750	0.691	0.732	0.000	-	0.853	0.517	0.893	0.775	0.000	-	0.778	0.912
Motorcycles	0	2	0	0	-	2	0	0	0	0	-	0	0	0	0	0	-	0	0	0	0	0	-	0	2
% Motorcycles	0.0	0.7	0.0	-	-	0.6	0.0	0.0	0.0	-	-	0.0	0.0	0.0	0.0	-	-	0.0	0.0	0.0	0.0	-	-	0.0	0.2
Cars & Light Goods	8	291	44	0	-	343	78	204	34	0	-	316	23	39	120	0	-	182	29	50	27	0	-	106	947
% Cars & Light Goods	88.9	97.7	100.0	-	-	97.7	95.1	94.9	69.4	-	-	91.3	95.8	83.0	100.0	-	-	95.3	93.5	100.0	87.1	-	-	94.6	94.7
Buses	0	0	0	0	-	0	0	2	4	0	-	6	0	2	0	0	-	2	0	0	0	0	-	0	8
% Buses	0.0	0.0	0.0	-	-	0.0	0.0	0.9	8.2	-	-	1.7	0.0	4.3	0.0	-	-	1.0	0.0	0.0	0.0	-	-	0.0	0.8
Single-Unit Trucks	1	4	0	0	-	5	4	9	9	0	-	22	1	3	0	0	-	4	2	0	3	0	-	5	36
% Single-Unit Trucks	11.1	1.3	0.0	-	-	1.4	4.9	4.2	18.4	-	-	6.4	4.2	6.4	0.0	-	-	2.1	6.5	0.0	9.7	-	-	4.5	3.6
Articulated Trucks	0	1	0	0	-	1	0	0	2	0	-	2	0	3	0	0	-	3	0	0	1	0	-	1	7
% Articulated Trucks	0.0	0.3	0.0	-	-	0.3	0.0	0.0	4.1	-	-	0.6	0.0	6.4	0.0	-	-	1.6	0.0	0.0	3.2	-	-	0.9	0.7
Bicycles on Road	0	0	0	0	-	0	0	0	0	0	-	0	0	0	0	0	-	0	0	0	0	0	-	0	0
% Bicycles on Road	0.0	0.0	0.0	-	-	0.0	0.0	0.0	0.0	-	-	0.0	0.0	0.0	0.0	-	-	0.0	0.0	0.0	0.0	-	-	0.0	0.0
Bicycles on Crosswalk	-	-	-	-	0	-	-	-	-	-	0	-	-	-	-	-	0	-	-	-	-	-	0	-	-
% Bicycles on Crosswalk	-	-	-	-	-	-	-	-	-	-	-	-	-	-	-	-	-	-	-	-	-	-	-	-	-
Pedestrians	-	-	-	-	0	-	-	-	-	-	0	-	-	-	-	-	0	-	-	-	-	-	0	-	-
% Pedestrians	-	-	-	-	-	-	-	-	-	-	-	-	-	-	-	-	-	-	-	-	-	-	-	-	-

Paradigm Transportation Solutions Limited
5A-150 Pinebush Rd

Cambridge, Ontario, Canada N1R 8J8
519-896-3163 cbowness@ptsl.com

Count Name: 16th Street & 28th Avenue
Site Code: 230607
Start Date: 11/14/2023

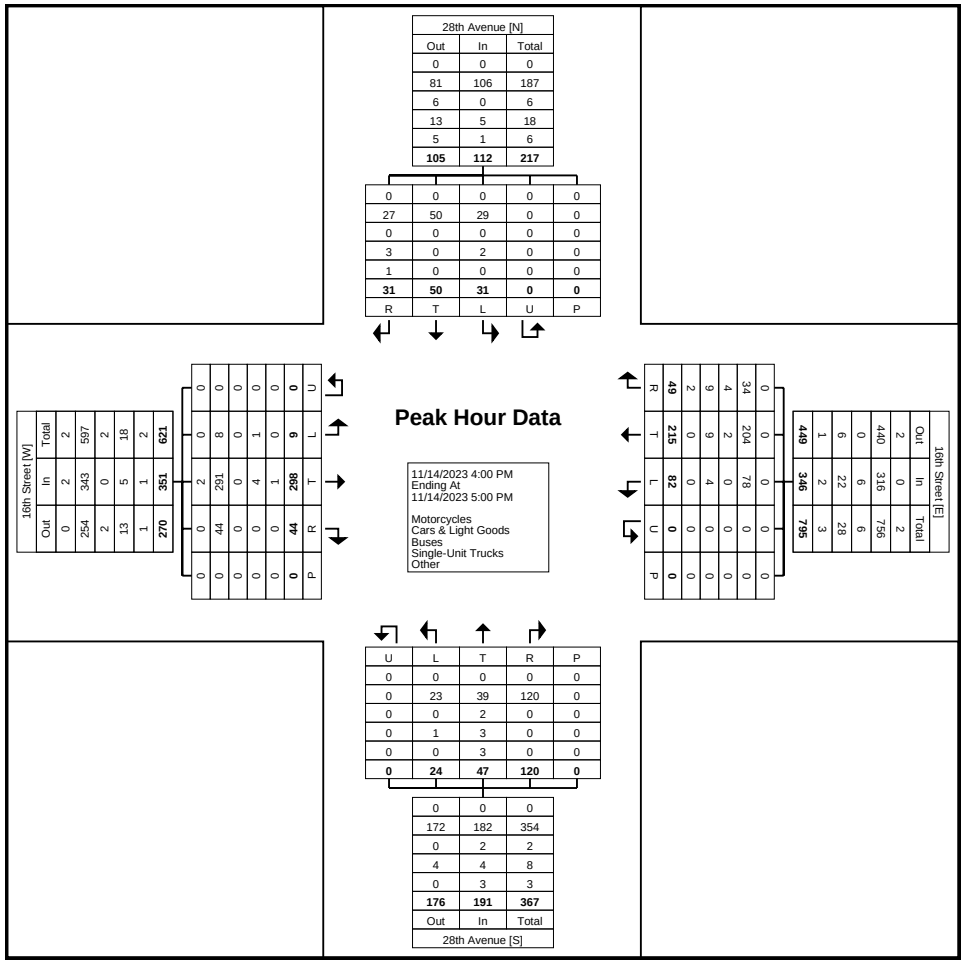

Turning Movement Peak Hour Data Plot (4:00 PM)

Cover Sheet

Location: Highway 26 @ 28th Avenue

Area/District: Owen Sound

Timing Based On T.M. Dated: Aug-04

Traffic Signal #

Timing Developed By: Plut / Burns

Approved By:

Installed By:

Installation Date:

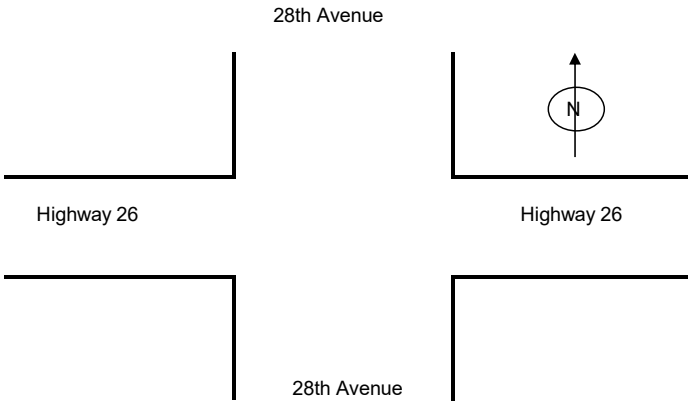

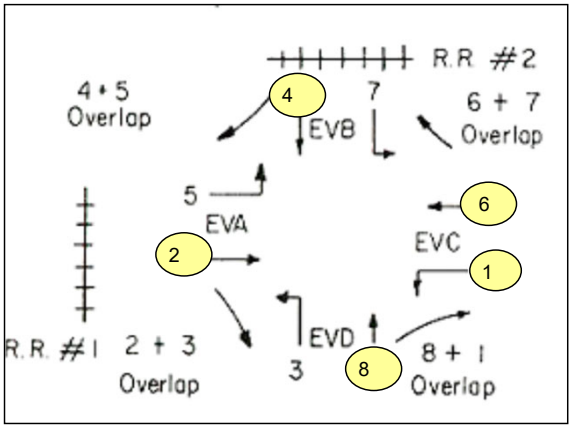

Circle Movements and Operations

Dial Out Telephone Number

		D
0	# OF DIGITS	**11**
1	1st DIGIT	**1**
2	2nd DIGIT	**9**
3	3rd DIGIT	**0**
4	4th DIGIT	**5**
5	5th DIGIT	**7**
6	6th DIGIT	**0**
7	7th DIGIT	**4**
8	8th DIGIT	**3**
9	9th DIGIT	**0**
A	10th DIGIT	**0**
B	11th DIGIT	**6**
C		
D		
E		
F		

< C + 0 + C = 2 >

Redial Time = 10

(C\5 + C + 0)

Default is Report All Alarms (no flags set)

Disable Alarm Reporting

Column F

		1	2	3	4	5	6	7	8
0	OMIT ALARMS					X			

< C + 0 + C = 5 >

1 = STOP TIME
2 = FLASH SENSE
3 = KEYBOARD ENTRY
4 = MANUAL PLAN SELECT
5 = ENABLE POLICE CNTRL (Not Used)
6 = EXTERNAL ALARM (Door Alarm)
7 = DETECTOR FAILURE

COMMUNICATIONS ADDRESSING

COMM ADDRESS
(C/0 + 0 + 0) = **1**

ZONE ADDRESS
(C/0 + 0 + 0) = **1**

AREA NUMBER
(C/0 + 0 + 0) = **1**

AREA ADDRESS
(C/0 + 0 + 0) = **1**

NOTE: If Local Controller is part of an Interconnect Ensure Phone Number Is Removed

Observe Redial Timer

(E/2 + D + 6)

ACTUATED INTERVAL TIMING AND FAZE FUNCTIONS

		PHASE 1	2	3	4	5	6	7	8
0	WALK	-	17	-	12	-	17	-	12
1	DON'T WALK	-	12	-	7	-	12	-	7
2	MIN INITIAL	5	20		10		20		10
3	TYPE 3 LIMIT	-		-		-		-	
4	ADD PER VEH	-		-		-		-	
5	VEH EXT	2.0	4.5	-	3.0	-	4.5	-	3.0
6	MAX GAP	2.0	4.5	-	3.0	-	4.5	-	3.0
7	MIN GAP	2.0	4.5	-	3.0	-	4.5	-	3.0
8	MAX LIMIT	10	45		30		45		30
9	MAXIMUM 2	-		-		-		-	
A	ADV /DLY WALK	-		-		-		-	
B	SEQUENCE TO	4		-		-		-	
C	COND SRV MIN	-		-		-		-	
D	REDUCE EVERY	-		-		-		-	
E	YELLOW	2.0	5.4		4.1		5.4		4.1
F	RED CLEAR		1.6		1.9		1.6		1.9

PHASE BANK # 1 < C + O + F = 1 >

		9	A	B	C	D		E
0							RR1 DLY	
1	PHASE 1	-					RR1 CLR	
2	PHASE 2	-					EVA DLY	
3	PHASE 3	-					EVA CLR	
4	PHASE 4	-					EVB DLY	
5	PHASE 5	-					EVB CLR	
6	PHASE 6	-					EVC DLY	
7	PHASE 7	-					EVC CLR	
8	PHASE 8	-					EVD DLY	
		MAX INT	ALT WALK	ALT FLH D/W	ALT INT	ALT EXT	EVD CLR	
							RR2 DLY	
							RR2 CLR	
							EV CLR	
							EV DLY	
							RR CLR	
							RR DLY	

ALL RED START
(F/1 + C +O) = **5.0**
RED REVERT
(F/1 + O + F) = **5.0**

COLUMN F PHASES

		1	2	3	4	5	6	7	8
0	PERMIT	X	X		X		X		X
1	RED LOCK								
2	YELLOW LOCK								
3	VEH MIN CALL								
4	PED RECALL		X				X		
5	PEDESTRIANS			View Only					
6	YIELD AT FLSH D/W								
7	RED REST								
8	DOUBLE ENTRY		X		X		X		X
9	VEH MAX CALL								
A	SOFT RECALL								
B	MAXIMUM 2								
C	COND SERVICE								
D	MAN CONT CALL								
E	YELLOW START		X				X		
F	FIRST PHASES				X				X

< C + O + F = 1 >

BI Tran Systems, Inc.
510 Bercut Dr., Sacremento, Calif. 95814
916/441-0260
Traffic Signal Program **233** Ontario
Timing Sheet #2

Date: 18-Jul-05

LOCATION

Hwy: 26

At: 28th Ave

PREEMPT MINIMUMS		A RR1-2 SPEV1	B SP EV2	C EMER VEH
A	WLK (DFLT)	4.0	4.0	4.0
B	FD WALK			
C	INITAL			

< C + O + F = 1 >

Column E Phases / Bits

		1	2	3	4	5	6	7	8
0	EXCLUSIVE								
1	RR1 CLEAR								
2	RR2 CLEAR								
3	RR2 LTD SRV								
4	PROT/PERM	X							
5	FLH TO PREMT								
6	FLASH ENTRY								
7	DISABL MIN YEL								
8	DISABL OVP YEL								
9	OVP FLH YEL								
A	EM VEH A								
B	EM VEH B								
C	EM VEH C								
D	EM VEH D								
E	EXTRA 1	X		X		X			
F	IC SELECT		X						

Column F Phases / Bits

		1	2	3	4	5	6	7	8
0									
1	EXT PERMIT 1								
2	EXT PERMIT 2								
3	EXCLU PED								
4									
5	PED 2P OUT		X						
6	PED 6P OUT						X		
7	PED 4P OUT				X				
8	PED 8P OUT								X
9	FLH YELLOW		X				X		
A									
B									
C									
D									
E	RESTRICTED								
F	EXTRA 2								

< C + O + E = 125 >

Column F Phases / Bits

		1	2	3	4	5	6	7	8
0	ADV GRN FLH								
1	PHASE FLASH								
2	FLASH WALK								
3	GUAR PASS								
4	SIMUL GAP								
5	SEQ TIMING								
6	ADV WALK								
7	DELAY WALK								
8	EXT RECALL								
9									
A	MAX EXTEN								
B	INH PED RSRV								
C	SEMI ACTUATED								
D									
E	STRT VEH CALL								
F	STRT PED CALL		X		X		X		X

SPECIALS < C + O + F = 2 >

MANUAL PLAN
< C/0 + A + 1 >
MANUAL OFFSET
< C/0 + A + 1 >
MANUAL SELECTION

MANUAL PLAN
0 = Automatic (Master)
9 = Control Plan 1 - 9
14 (E) = Free (Isolated)
15 (F) = Software Flash

MANUAL OFFSET
0 = Automatic (Master)
1 = Offset A
2 = Offset B
3 = Offset C

FLASH TO PREEMPT

1 = EVA
2 = EVB
3 = EVC
4 = EVD
5 = RR1
6 = RR2
7 = SE1
8 = SE2

EXTRA 1

1 = TBC TYPE 1
2 = NEMA EXT. COORD.
3 = DAYLIGHT SAVINGS
4 =
5 = EXPANDED STATUS REPORTING
6 = INTERNATIONAL PED
7 = CLEAR OUTPUTS DURING FLASH
8 = SPLIT RING

EXTRA 2

1 = AWR ON DURING PHASE INITAL
2 = LMU INSTALLED

IC SELECT

2 = 2 WAY MODEM
3 = 7 WIRE SLAVE
4 = FLASH / FREE
5 = SIMPLES MASTER
7 = 7 WIRE MASTER
8 = OFFSET INTURP

Appendix C

Existing Traffic Operations Reports

Lane Group	EBL	EBT	EBR	WBL	WBT	WBR	NBL	NBT	NBR	SBL	SBT	SBR
Lane Configurations												
Traffic Volume (vph)	14	134	10	158	250	42	20	42	57	39	16	10
Future Volume (vph)	14	134	10	158	250	42	20	42	57	39	16	10
Ideal Flow (vphpl)	1900	1900	1900	1900	1900	1900	1900	1900	1900	1900	1900	1900
Storage Length (m)	70.0		70.0	120.0		0.0	55.0		0.0	55.0		0.0
Storage Lanes	1		1	1		0	1		0	1		0
Taper Length (m)	100.0			100.0			100.0			100.0		
Lane Util. Factor	1.00	1.00	1.00	1.00	1.00	1.00	1.00	1.00	1.00	1.00	1.00	1.00
Frt			0.850		0.978			0.914			0.941	
Flt Protected	0.950			0.950			0.950			0.950		
Satd. Flow (prot)	1805	1810	1468	1787	1734	0	1641	1668	0	1492	1548	0
Flt Permitted	0.568			0.585			0.739			0.687		
Satd. Flow (perm)	1079	1810	1468	1100	1734	0	1276	1668	0	1079	1548	0
Right Turn on Red			Yes			Yes			Yes			Yes
Satd. Flow (RTOR)			65		14			62			11	
Link Speed (k/h)		50			50			80			50	
Link Distance (m)		405.7			474.4			304.1			233.9	
Travel Time (s)		29.2			34.2			13.7			16.8	
Peak Hour Factor	0.92	0.92	0.92	0.92	0.92	0.92	0.92	0.92	0.92	0.92	0.92	0.92
Heavy Vehicles (%)	0%	5%	10%	1%	4%	26%	10%	7%	2%	21%	19%	10%
Adj. Flow (vph)	15	146	11	172	272	46	22	46	62	42	17	11
Shared Lane Traffic (%)												
Lane Group Flow (vph)	15	146	11	172	318	0	22	108	0	42	28	0
Turn Type	Perm	NA	Perm	pm+pt	NA		Perm	NA		Perm	NA	
Protected Phases		2		1	6			8			4	
Permitted Phases	2		2	6			8			4		
Detector Phase	2	2	2	1	6		8	8		4	4	
Switch Phase												
Minimum Initial (s)	20.0	20.0	20.0	5.0	20.0		10.0	10.0		10.0	10.0	
Minimum Split (s)	36.0	36.0	36.0	8.0	36.0		29.0	29.0		29.0	29.0	
Total Split (s)	52.0	52.0	52.0	12.0	64.0		36.0	36.0		36.0	36.0	
Total Split (%)	52.0%	52.0%	52.0%	12.0%	64.0%		36.0%	36.0%		36.0%	36.0%	
Maximum Green (s)	45.0	45.0	45.0	9.0	57.0		30.0	30.0		30.0	30.0	
Yellow Time (s)	5.4	5.4	5.4	3.0	5.4		4.1	4.1		4.1	4.1	
All-Red Time (s)	1.6	1.6	1.6	0.0	1.6		1.9	1.9		1.9	1.9	
Lost Time Adjust (s)	0.0	0.0	0.0	0.0	0.0		0.0	0.0		0.0	0.0	
Total Lost Time (s)	7.0	7.0	7.0	3.0	7.0		6.0	6.0		6.0	6.0	
Lead/Lag	Lag	Lag	Lag	Lead								
Lead-Lag Optimize?	Yes	Yes	Yes	Yes								
Vehicle Extension (s)	4.5	4.5	4.5	2.0	4.5		3.0	3.0		3.0	3.0	
Recall Mode	Min	Min	Min	None	Min		None	None		None	None	
Walk Time (s)	17.0	17.0	17.0		17.0		12.0	12.0		12.0	12.0	
Flash Dont Walk (s)	12.0	12.0	12.0		12.0		7.0	7.0		7.0	7.0	
Pedestrian Calls (#/hr)	0	0	0		0		0	0		0	0	
Act Effct Green (s)	24.5	24.5	24.5	33.8	31.8		10.4	10.4		10.4	10.4	
Actuated g/C Ratio	0.50	0.50	0.50	0.69	0.65		0.21	0.21		0.21	0.21	
v/c Ratio	0.03	0.16	0.01	0.20	0.28		0.08	0.27		0.18	0.08	
Control Delay	11.1	12.1	0.0	4.4	6.4		19.1	11.9		20.8	14.7	
Queue Delay	0.0	0.0	0.0	0.0	0.0		0.0	0.0		0.0	0.0	

Lane Group	EBL	EBT	EBR	WBL	WBT	WBR	NBL	NBT	NBR	SBL	SBT	SBR
Total Delay	11.1	12.1	0.0	4.4	6.4		19.1	11.9		20.8	14.7	
LOS	B	B	A	A	A		B	B		C	B	
Approach Delay		11.2			5.7			13.2			18.4	
Approach LOS		B			A			B			B	
Queue Length 50th (m)	0.9	9.4	0.0	5.5	14.0		1.8	3.9		3.6	1.4	
Queue Length 95th (m)	4.0	20.5	0.0	11.0	25.6		7.0	15.1		11.1	7.0	
Internal Link Dist (m)		381.7			450.4			280.1			209.9	
Turn Bay Length (m)	70.0		70.0	120.0			55.0			55.0		
Base Capacity (vph)	978	1641	1337	895	1734		819	1093		692	998	
Starvation Cap Reductn	0	0	0	0	0		0	0		0	0	
Spillback Cap Reductn	0	0	0	0	0		0	0		0	0	
Storage Cap Reductn	0	0	0	0	0		0	0		0	0	
Reduced v/c Ratio	0.02	0.09	0.01	0.19	0.18		0.03	0.10		0.06	0.03	

Intersection Summary			
Area Type:	Other		
Cycle Length: 100			
Actuated Cycle Length: 48.7			
Natural Cycle: 75			
Control Type: Semi Act-Uncoord			
Maximum v/c Ratio: 0.28			
Intersection Signal Delay: 8.9		Intersection LOS: A	
Intersection Capacity Utilization 58.8%		ICU Level of Service B	
Analysis Period (min) 15			

Splits and Phases: 2: 28th Avenue & 16th Street

Movement	EBL	EBT	EBR	WBL	WBT	WBR	NBL	NBT	NBR	SBL	SBT	SBR
Lane Configurations												
Traffic Volume (veh/h)	14	134	10	158	250	42	20	42	57	39	16	10
Future Volume (veh/h)	14	134	10	158	250	42	20	42	57	39	16	10
Initial Q (Qb), veh	0	0	0	0	0	0	0	0	0	0	0	0
Ped-Bike Adj(A_pbT)	1.00		1.00	1.00		1.00	1.00		1.00	1.00		1.00
Parking Bus, Adj	1.00	1.00	1.00	1.00	1.00	1.00	1.00	1.00	1.00	1.00	1.00	1.00
Work Zone On Approach		No			No			No			No	
Adj Sat Flow, veh/h/ln	1900	1826	1752	1885	1841	1515	1752	1796	1870	1589	1618	1752
Adj Flow Rate, veh/h	15	146	11	172	272	46	22	46	62	42	17	11
Peak Hour Factor	0.92	0.92	0.92	0.92	0.92	0.92	0.92	0.92	0.92	0.92	0.92	0.92
Percent Heavy Veh, %	0	5	10	1	4	26	10	7	2	21	19	10
Cap, veh/h	576	732	595	740	847	143	368	130	176	286	172	112
Arrive On Green	0.40	0.40	0.40	0.09	0.55	0.55	0.19	0.19	0.19	0.19	0.19	0.19
Sat Flow, veh/h	1078	1826	1485	1795	1534	260	1295	693	935	1092	918	594
Grp Volume(v), veh/h	15	146	11	172	0	318	22	0	108	42	0	28
Grp Sat Flow(s),veh/h/ln	1078	1826	1485	1795	0	1794	1295	0	1628	1092	0	1512
Q Serve(g_s), s	0.4	2.6	0.2	2.5	0.0	4.8	0.7	0.0	2.9	1.7	0.0	0.8
Cycle Q Clear(g_c), s	0.4	2.6	0.2	2.5	0.0	4.8	1.5	0.0	2.9	4.6	0.0	0.8
Prop In Lane	1.00		1.00	1.00		0.14	1.00		0.57	1.00		0.39
Lane Grp Cap(c), veh/h	576	732	595	740	0	990	368	0	306	286	0	284
V/C Ratio(X)	0.03	0.20	0.02	0.23	0.00	0.32	0.06	0.00	0.35	0.15	0.00	0.10
Avail Cap(c_a), veh/h	1117	1646	1338	900	0	2049	902	0	978	738	0	908
HCM Platoon Ratio	1.00	1.00	1.00	1.00	1.00	1.00	1.00	1.00	1.00	1.00	1.00	1.00
Upstream Filter(I)	1.00	1.00	1.00	1.00	0.00	1.00	1.00	0.00	1.00	1.00	0.00	1.00
Uniform Delay (d), s/veh	9.1	9.7	9.0	6.3	0.0	6.1	17.4	0.0	17.6	19.6	0.0	16.8
Incr Delay (d2), s/veh	0.0	0.2	0.0	0.1	0.0	0.3	0.1	0.0	0.7	0.2	0.0	0.1
Initial Q Delay(d3),s/veh	0.0	0.0	0.0	0.0	0.0	0.0	0.0	0.0	0.0	0.0	0.0	0.0
%ile BackOfQ(50%),veh/ln	0.0	0.0	0.0	0.0	0.0	0.1	0.0	0.0	0.1	0.1	0.0	0.0
Unsig. Movement Delay, s/veh												
LnGrp Delay(d),s/veh	9.1	10.0	9.1	6.4	0.0	6.4	17.5	0.0	18.3	19.9	0.0	16.9
LnGrp LOS	A	A	A	A	A	A	B	A	B	B	A	B
Approach Vol, veh/h		172			490			130			70	
Approach Delay, s/veh		9.8			6.4			18.2			18.7	
Approach LOS		A			A			B			B	

Timer - Assigned Phs	1	2		4		6		8
Phs Duration (G+Y+Rc), s	7.5	27.0		15.4		34.5		15.4
Change Period (Y+Rc), s	3.0	* 7		* 6		* 7		* 6
Max Green Setting (Gmax), s	9.0	* 45		* 30		* 57		* 30
Max Q Clear Time (g_c+I1), s	4.5	4.6		6.6		6.8		4.9
Green Ext Time (p_c), s	0.2	2.0		0.3		4.4		0.8

Intersection Summary		
HCM 6th Ctrl Delay		9.9
HCM 6th LOS		A

Notes

* HCM 6th computational engine requires equal clearance times for the phases crossing the barrier.

Lane Group	EBL	EBR	NBL	NBT	SBT	SBR
Lane Configurations						
Traffic Volume (vph)	45	17	78	75	42	143
Future Volume (vph)	45	17	78	75	42	143
Ideal Flow (vphpl)	1900	1900	1900	1900	1900	1900
Storage Length (m)	0.0	20.0	0.0			0.0
Storage Lanes	1	1	0			0
Taper Length (m)	7.5		7.5			
Lane Util. Factor	1.00	1.00	1.00	1.00	1.00	1.00
Frt		0.850			0.896	
Flt Protected	0.950			0.975		
Satd. Flow (prot)	1805	1615	0	1740	1652	0
Flt Permitted	0.950			0.975		
Satd. Flow (perm)	1805	1615	0	1740	1652	0
Link Speed (k/h)	80			60	80	
Link Distance (m)	310.5			265.1	256.5	
Travel Time (s)	14.0			15.9	11.5	
Peak Hour Factor	0.92	0.92	0.92	0.92	0.92	0.92
Heavy Vehicles (%)	0%	0%	5%	8%	10%	1%
Adj. Flow (vph)	49	18	85	82	46	155
Shared Lane Traffic (%)						
Lane Group Flow (vph)	49	18	0	167	201	0
Sign Control	Stop			Free	Free	

Intersection Summary		
Area Type:	Other	
Control Type: Unsignalized		
Intersection Capacity Utilization 32.6%		ICU Level of Service A
Analysis Period (min) 15		

Intersection	
Int Delay, s/veh	3.1

Movement	EBL	EBR	NBL	NBT	SBT	SBR
Lane Configurations						
Traffic Vol, veh/h	45	17	78	75	42	143
Future Vol, veh/h	45	17	78	75	42	143
Conflicting Peds, #/hr	0	0	0	0	0	0
Sign Control	Stop	Stop	Free	Free	Free	Free
RT Channelized	-	None	-	None	-	Yield
Storage Length	0	20	-	-	-	-
Veh in Median Storage, #	0	-	-	0	0	-
Grade, %	0	-	-	0	0	-
Peak Hour Factor	92	92	92	92	92	92
Heavy Vehicles, %	0	0	5	8	10	1
Mvmt Flow	49	18	85	82	46	155

Major/Minor	Minor2		Major1		Major2	
Conflicting Flow All	376	124	46	0	-	0
Stage 1	124	-	-	-	-	-
Stage 2	252	-	-	-	-	-
Critical Hdwy	6.4	6.2	4.15	-	-	-
Critical Hdwy Stg 1	5.4	-	-	-	-	-
Critical Hdwy Stg 2	5.4	-	-	-	-	-
Follow-up Hdwy	3.5	3.3	2.245	-	-	-
Pot Cap-1 Maneuver	629	932	1543	-	-	-
Stage 1	907	-	-	-	-	-
Stage 2	795	-	-	-	-	-
Platoon blocked, %				-	-	-
Mov Cap-1 Maneuver	593	932	1543	-	-	-
Mov Cap-2 Maneuver	593	-	-	-	-	-
Stage 1	854	-	-	-	-	-
Stage 2	795	-	-	-	-	-

Approach	EB	NB	SB
HCM Control Delay, s	10.9	3.8	0
HCM LOS	B		

Minor Lane/Major Mvmt	NBL	NBT	EBLn1	EBLn2	SBT	SBR
Capacity (veh/h)	1543	-	593	932	-	-
HCM Lane V/C Ratio	0.055	-	0.082	0.02	-	-
HCM Control Delay (s)	7.5	0	11.6	8.9	-	-
HCM Lane LOS	A	A	B	A	-	-
HCM 95th %tile Q(veh)	0.2	-	0.3	0.1	-	-

Lane Group	EBL	EBT	EBR	WBL	WBT	WBR	NBL	NBT	NBR	SBL	SBT	SBR
Lane Configurations												
Traffic Volume (vph)	9	298	44	82	215	49	24	47	120	31	50	31
Future Volume (vph)	9	298	44	82	215	49	24	47	120	31	50	31
Ideal Flow (vphpl)	1900	1900	1900	1900	1900	1900	1900	1900	1900	1900	1900	1900
Storage Length (m)	70.0		70.0	120.0		0.0	55.0		0.0	55.0		0.0
Storage Lanes	1		1	1		0	1		0	1		0
Taper Length (m)	100.0			100.0			100.0			100.0		
Lane Util. Factor	1.00	1.00	1.00	1.00	1.00	1.00	1.00	1.00	1.00	1.00	1.00	1.00
Frt			0.850		0.972			0.892			0.942	
Flt Protected	0.950			0.950			0.950			0.950		
Satd. Flow (prot)	1626	1863	1615	1719	1682	0	1736	1617	0	1687	1704	0
Flt Permitted	0.584			0.492			0.700			0.643		
Satd. Flow (perm)	1000	1863	1615	890	1682	0	1279	1617	0	1142	1704	0
Right Turn on Red			Yes			Yes			Yes			Yes
Satd. Flow (RTOR)			65		19			130			32	
Link Speed (k/h)		50			50			80			50	
Link Distance (m)		405.7			474.4			304.1			233.9	
Travel Time (s)		29.2			34.2			13.7			16.8	
Peak Hour Factor	0.92	0.92	0.92	0.92	0.92	0.92	0.92	0.92	0.92	0.92	0.92	0.92
Heavy Vehicles (%)	11%	2%	0%	5%	5%	31%	4%	17%	0%	7%	0%	13%
Adj. Flow (vph)	10	324	48	89	234	53	26	51	130	34	54	34
Shared Lane Traffic (%)												
Lane Group Flow (vph)	10	324	48	89	287	0	26	181	0	34	88	0
Turn Type	Perm	NA	Perm	pm+pt	NA		Perm	NA		Perm	NA	
Protected Phases		2		1	6			8			4	
Permitted Phases	2		2	6			8			4		
Detector Phase	2	2	2	1	6		8	8		4	4	
Switch Phase												
Minimum Initial (s)	20.0	20.0	20.0	5.0	20.0		10.0	10.0		10.0	10.0	
Minimum Split (s)	36.0	36.0	36.0	8.0	36.0		29.0	29.0		29.0	29.0	
Total Split (s)	52.0	52.0	52.0	12.0	64.0		36.0	36.0		36.0	36.0	
Total Split (%)	52.0%	52.0%	52.0%	12.0%	64.0%		36.0%	36.0%		36.0%	36.0%	
Maximum Green (s)	45.0	45.0	45.0	9.0	57.0		30.0	30.0		30.0	30.0	
Yellow Time (s)	5.4	5.4	5.4	3.0	5.4		4.1	4.1		4.1	4.1	
All-Red Time (s)	1.6	1.6	1.6	0.0	1.6		1.9	1.9		1.9	1.9	
Lost Time Adjust (s)	0.0	0.0	0.0	0.0	0.0		0.0	0.0		0.0	0.0	
Total Lost Time (s)	7.0	7.0	7.0	3.0	7.0		6.0	6.0		6.0	6.0	
Lead/Lag	Lag	Lag	Lag	Lead								
Lead-Lag Optimize?	Yes	Yes	Yes	Yes								
Vehicle Extension (s)	4.5	4.5	4.5	2.0	4.5		3.0	3.0		3.0	3.0	
Recall Mode	Min	Min	Min	None	Min		None	None		None	None	
Walk Time (s)	17.0	17.0	17.0		17.0		12.0	12.0		12.0	12.0	
Flash Dont Walk (s)	12.0	12.0	12.0		12.0		7.0	7.0		7.0	7.0	
Pedestrian Calls (#/hr)	0	0	0		0		0	0		0	0	
Act Effct Green (s)	20.4	20.4	20.4	31.2	27.2		10.4	10.4		10.4	10.4	
Actuated g/C Ratio	0.40	0.40	0.40	0.62	0.54		0.21	0.21		0.21	0.21	
v/c Ratio	0.02	0.43	0.07	0.14	0.32		0.10	0.42		0.15	0.24	
Control Delay	10.7	14.2	3.0	4.4	7.1		18.7	10.5		19.5	14.6	
Queue Delay	0.0	0.0	0.0	0.0	0.0		0.0	0.0		0.0	0.0	

Lane Group	EBL	EBT	EBR	WBL	WBT	WBR	NBL	NBT	NBR	SBL	SBT	SBR
Total Delay	10.7	14.2	3.0	4.4	7.1		18.7	10.5		19.5	14.6	
LOS	B	B	A	A	A		B	B		B	B	
Approach Delay		12.7			6.4			11.5			16.0	
Approach LOS		B			A			B			B	
Queue Length 50th (m)	0.6	22.3	0.0	2.7	12.1		2.1	4.2		2.8	4.6	
Queue Length 95th (m)	3.1	44.0	4.0	7.1	25.0		7.6	18.6		9.3	14.9	
Internal Link Dist (m)		381.7			450.4			280.1			209.9	
Turn Bay Length (m)	70.0		70.0	120.0			55.0			55.0		
Base Capacity (vph)	885	1649	1437	696	1682		762	1016		681	1029	
Starvation Cap Reductn	0	0	0	0	0		0	0		0	0	
Spillback Cap Reductn	0	0	0	0	0		0	0		0	0	
Storage Cap Reductn	0	0	0	0	0		0	0		0	0	
Reduced v/c Ratio	0.01	0.20	0.03	0.13	0.17		0.03	0.18		0.05	0.09	

Intersection Summary			
Area Type:	Other		
Cycle Length: 100			
Actuated Cycle Length: 50.7			
Natural Cycle: 75			
Control Type: Semi Act-Uncoord			
Maximum v/c Ratio: 0.43			
Intersection Signal Delay: 10.7		Intersection LOS: B	
Intersection Capacity Utilization 73.2%		ICU Level of Service D	
Analysis Period (min) 15			

Splits and Phases: 2: 28th Avenue & 16th Street

Movement	EBL	EBT	EBR	WBL	WBT	WBR	NBL	NBT	NBR	SBL	SBT	SBR
Lane Configurations												
Traffic Volume (veh/h)	9	298	44	82	215	49	24	47	120	31	50	31
Future Volume (veh/h)	9	298	44	82	215	49	24	47	120	31	50	31
Initial Q (Qb), veh	0	0	0	0	0	0	0	0	0	0	0	0
Ped-Bike Adj(A_pbT)	1.00		1.00	1.00		1.00	1.00		1.00	1.00		1.00
Parking Bus, Adj	1.00	1.00	1.00	1.00	1.00	1.00	1.00	1.00	1.00	1.00	1.00	1.00
Work Zone On Approach		No			No			No			No	
Adj Sat Flow, veh/h/ln	1737	1870	1900	1826	1826	1441	1841	1648	1900	1796	1900	1707
Adj Flow Rate, veh/h	10	324	48	89	234	53	26	51	130	34	54	34
Peak Hour Factor	0.92	0.92	0.92	0.92	0.92	0.92	0.92	0.92	0.92	0.92	0.92	0.92
Percent Heavy Veh, %	11	2	0	5	5	31	4	17	0	7	0	13
Cap, veh/h	556	757	652	546	773	175	350	82	210	246	218	137
Arrive On Green	0.40	0.40	0.40	0.07	0.54	0.54	0.20	0.20	0.20	0.20	0.20	0.20
Sat Flow, veh/h	1014	1870	1610	1739	1441	326	1288	411	1048	1155	1090	686
Grp Volume(v), veh/h	10	324	48	89	0	287	26	0	181	34	0	88
Grp Sat Flow(s),veh/h/ln	1014	1870	1610	1739	0	1767	1288	0	1459	1155	0	1776
Q Serve(g_s), s	0.3	6.2	0.9	1.3	0.0	4.4	0.9	0.0	5.6	1.4	0.0	2.1
Cycle Q Clear(g_c), s	0.3	6.2	0.9	1.3	0.0	4.4	2.9	0.0	5.6	7.0	0.0	2.1
Prop In Lane	1.00		1.00	1.00		0.18	1.00		0.72	1.00		0.39
Lane Grp Cap(c), veh/h	556	757	652	546	0	949	350	0	292	246	0	356
V/C Ratio(X)	0.02	0.43	0.07	0.16	0.00	0.30	0.07	0.00	0.62	0.14	0.00	0.25
Avail Cap(c_a), veh/h	1069	1703	1466	739	0	2038	874	0	886	716	0	1078
HCM Platoon Ratio	1.00	1.00	1.00	1.00	1.00	1.00	1.00	1.00	1.00	1.00	1.00	1.00
Upstream Filter(I)	1.00	1.00	1.00	1.00	0.00	1.00	1.00	0.00	1.00	1.00	0.00	1.00
Uniform Delay (d), s/veh	8.8	10.6	9.0	6.8	0.0	6.3	17.9	0.0	18.0	21.2	0.0	16.6
Incr Delay (d2), s/veh	0.0	0.7	0.1	0.1	0.0	0.3	0.1	0.0	2.1	0.3	0.0	0.4
Initial Q Delay(d3),s/veh	0.0	0.0	0.0	0.0	0.0	0.0	0.0	0.0	0.0	0.0	0.0	0.0
%ile BackOfQ(50%),veh/ln	0.0	0.1	0.0	0.0	0.0	0.1	0.0	0.0	0.2	0.1	0.0	0.1
Unsig. Movement Delay, s/veh												
LnGrp Delay(d),s/veh	8.9	11.2	9.1	6.9	0.0	6.6	17.9	0.0	20.2	21.5	0.0	17.0
LnGrp LOS	A	B	A	A	A	A	B	A	C	C	A	B
Approach Vol, veh/h		382			376			207			122	
Approach Delay, s/veh		10.9			6.7			19.9			18.2	
Approach LOS		B			A			B			B	

Timer - Assigned Phs	1	2		4		6		8
Phs Duration (G+Y+Rc), s	6.5	27.0		15.9		33.5		15.9
Change Period (Y+Rc), s	3.0	* 7		* 6		* 7		* 6
Max Green Setting (Gmax), s	9.0	* 45		* 30		* 57		* 30
Max Q Clear Time (g_c+I1), s	3.3	8.2		9.0		6.4		7.6
Green Ext Time (p_c), s	0.1	4.8		0.7		4.0		1.4

Intersection Summary		
HCM 6th Ctrl Delay		12.0
HCM 6th LOS		B

Notes

* HCM 6th computational engine requires equal clearance times for the phases crossing the barrier.

Lane Group	EBL	EBR	NBL	NBT	SBT	SBR
Lane Configurations						
Traffic Volume (vph)	133	46	25	57	90	89
Future Volume (vph)	133	46	25	57	90	89
Ideal Flow (vphpl)	1900	1900	1900	1900	1900	1900
Storage Length (m)	0.0	20.0	0.0			0.0
Storage Lanes	1	1	0			0
Taper Length (m)	7.5		7.5			
Lane Util. Factor	1.00	1.00	1.00	1.00	1.00	1.00
Frt		0.850			0.933	
Flt Protected	0.950			0.985		
Satd. Flow (prot)	1805	1615	0	1705	1746	0
Flt Permitted	0.950			0.985		
Satd. Flow (perm)	1805	1615	0	1705	1746	0
Link Speed (k/h)	80			60	80	
Link Distance (m)	310.5			265.1	256.5	
Travel Time (s)	14.0			15.9	11.5	
Peak Hour Factor	0.92	0.92	0.92	0.92	0.92	0.92
Heavy Vehicles (%)	0%	0%	0%	14%	2%	1%
Adj. Flow (vph)	145	50	27	62	98	97
Shared Lane Traffic (%)						
Lane Group Flow (vph)	145	50	0	89	195	0
Sign Control	Stop			Free	Free	

Intersection Summary		
Area Type:	Other	
Control Type: Unsignalized		
Intersection Capacity Utilization 31.9%		ICU Level of Service A
Analysis Period (min) 15		

Intersection	
Int Delay, s/veh	4.8

Movement	EBL	EBR	NBL	NBT	SBT	SBR
Lane Configurations						
Traffic Vol, veh/h	133	46	25	57	90	89
Future Vol, veh/h	133	46	25	57	90	89
Conflicting Peds, #/hr	0	0	0	0	0	0
Sign Control	Stop	Stop	Free	Free	Free	Free
RT Channelized	-	None	-	None	-	Yield
Storage Length	0	20	-	-	-	-
Veh in Median Storage, #	0	-	-	0	0	-
Grade, %	0	-	-	0	0	-
Peak Hour Factor	92	92	92	92	92	92
Heavy Vehicles, %	0	0	0	14	2	1
Mvmt Flow	145	50	27	62	98	97

Major/Minor	Minor2		Major1		Major2	
Conflicting Flow All	263	147	98	0	-	0
Stage 1	147	-	-	-	-	-
Stage 2	116	-	-	-	-	-
Critical Hdwy	6.4	6.2	4.1	-	-	-
Critical Hdwy Stg 1	5.4	-	-	-	-	-
Critical Hdwy Stg 2	5.4	-	-	-	-	-
Follow-up Hdwy	3.5	3.3	2.2	-	-	-
Pot Cap-1 Maneuver	730	905	1508	-	-	-
Stage 1	885	-	-	-	-	-
Stage 2	914	-	-	-	-	-
Platoon blocked, %				-	-	-
Mov Cap-1 Maneuver	716	905	1508	-	-	-
Mov Cap-2 Maneuver	716	-	-	-	-	-
Stage 1	868	-	-	-	-	-
Stage 2	914	-	-	-	-	-

Approach	EB	NB	SB
HCM Control Delay, s	10.8	2.3	0
HCM LOS	B		

Minor Lane/Major Mvmt	NBL	NBT	EBLn1	EBLn2	SBT	SBR
Capacity (veh/h)	1508	-	716	905	-	-
HCM Lane V/C Ratio	0.018	-	0.202	0.055	-	-
HCM Control Delay (s)	7.4	0	11.3	9.2	-	-
HCM Lane LOS	A	A	B	A	-	-
HCM 95th %tile Q(veh)	0.1	-	0.8	0.2	-	-

Appendix D

Background Development Traffic Volumes

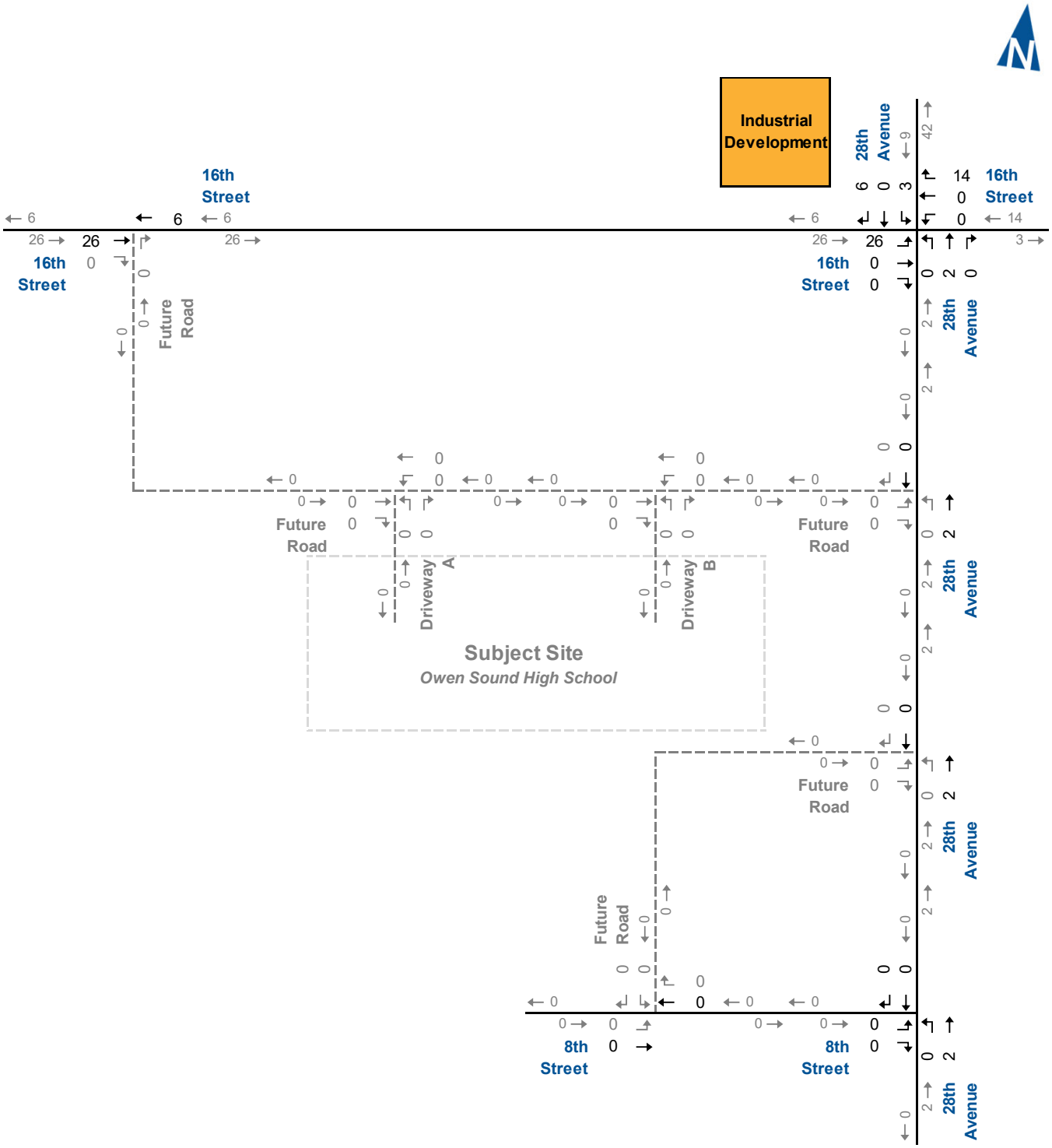

Background Development Traffic Volumes – AM Peak Hour Industrial Development

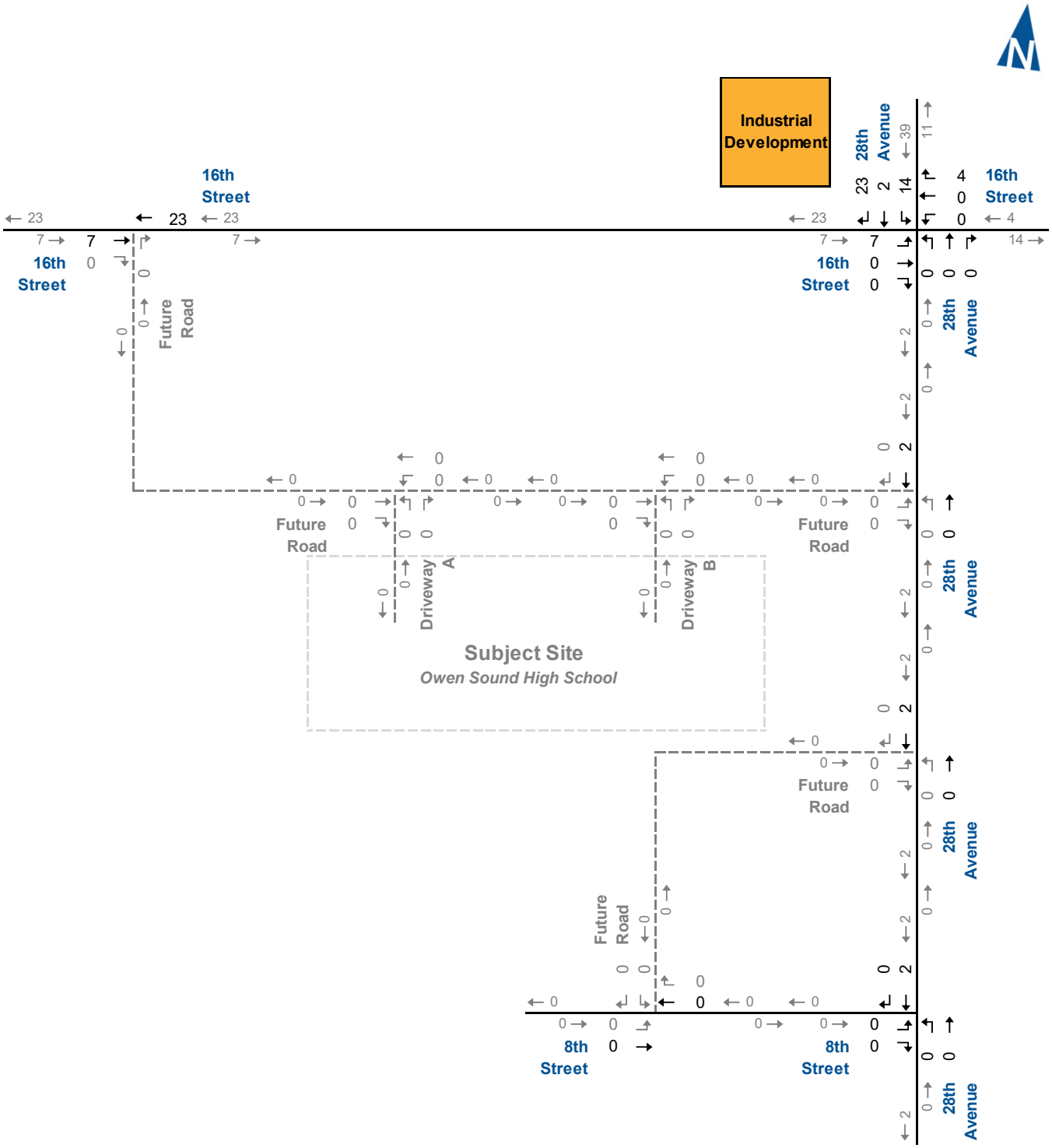

Background Development Traffic Volumes – PM Peak Hour Industrial Development

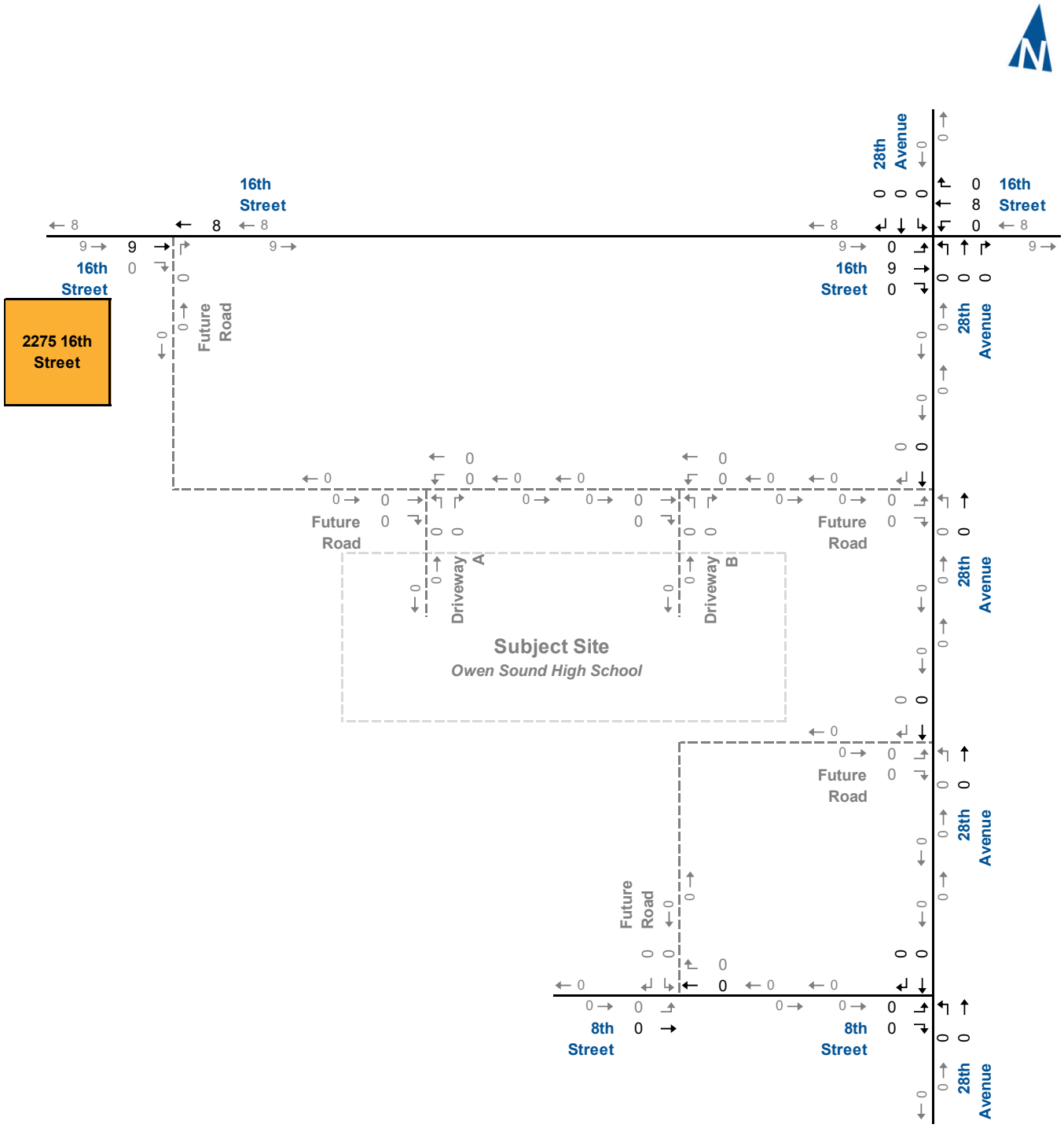

Background Development Traffic Volumes – AM Peak Hour 2275 16th Street

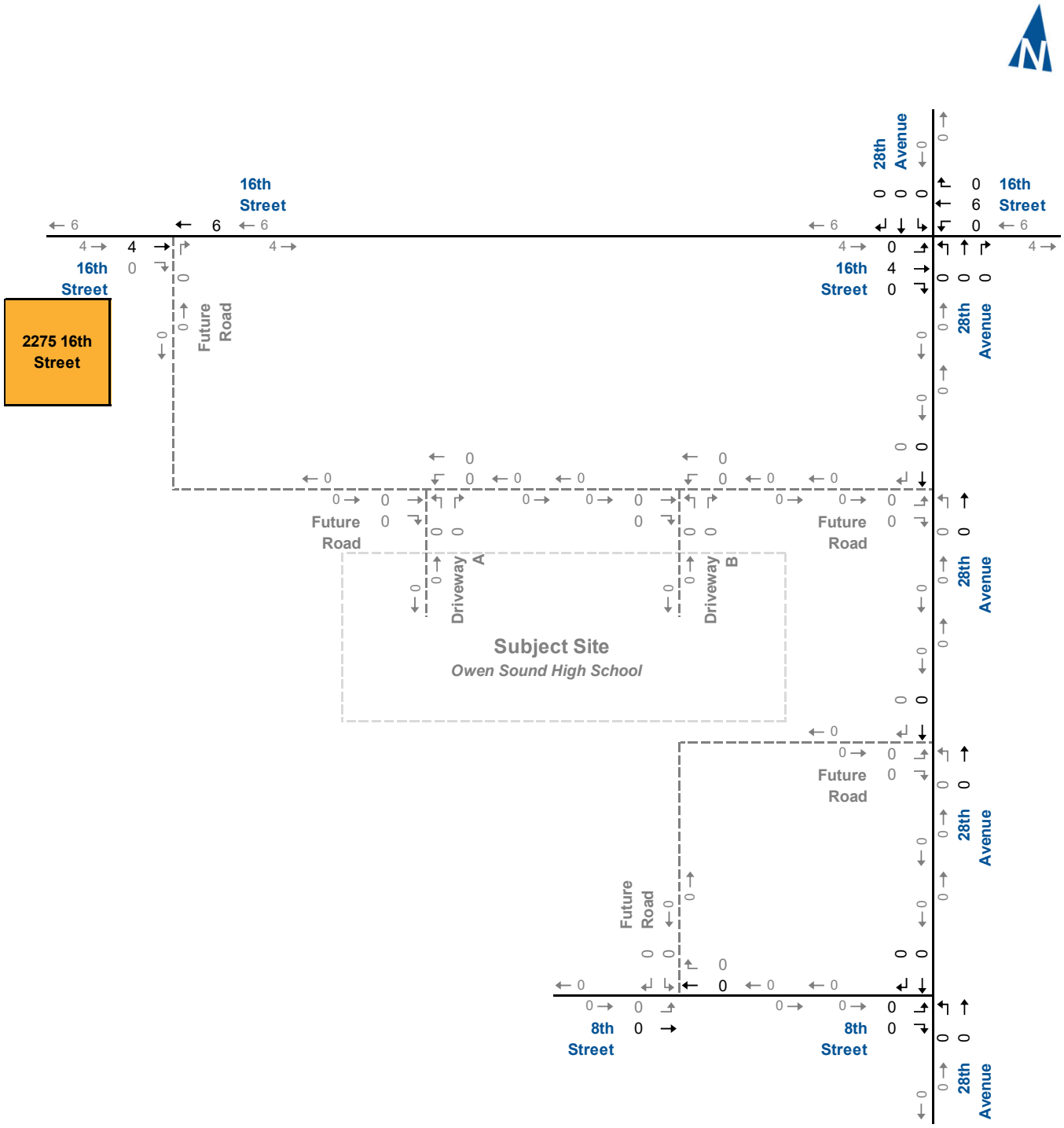

Background Development Traffic Volumes – PM Peak Hour 2275 16th Street

Heritage Grove Site Plan

SITE PLAN INFORMATION TAKEN FROM SITE PLAN PREPARED BY SCULLY & LEE ASSOCIATES ARCHITECTS INC. DRAWINGS A1, DATED FEB. 2011, REV 12, DATED OCT. 2, 2013 AND FROM PLAN OF SURVEY OF PART OF PARK LOTS 'A' AND 'B' RANGE 'B' EAST OF THE CARAFRAXA ROAD GEOGRAPHIC TOWNSHIP OF SYDENHAM CITY OF OWEN SOUND COUNTY OF GREY BY HEWETT & MILNE LIMITED

SITE PLAN

SITE AREA	7.6 Ha	18.78 AC
COVERAGE	23.2%	
BUILDING GFA	SM	SF
BLDG A1	1,772.40	19,078
BLDG A2	1,913.30	20,595
BLDG B	2,000.50	21,533
BLDG C	780.30	8,400
BLDG D	789.70	8,500
BLDG E	1,858.10	20,000
BLDG F	796.30	8,571
BLDG G	4,403.60	47,400
BLDG H1	418.00	4,500
BLDG H2	105.00	1,125
BLDG H3	130.00	1,400
BLDG H4	200.00	2,150
BLDG I1	246.00	2,650
BLDG I2	116.12	1250
BLDG K1	3251.61	35,000
BLDG K2	1309.28	14,093
TOTAL GFA	20,090.21	216,245

ZONING AS PER BYLAW2010-078 (SEE ZONING ANALYSIS)

PARKING (2.65m x 6m W/ 6m drive aisle)

REQUIRED	
1/15 sm gfa up to 300 sm	20 spaces
1/20 sm gfa thereafter	970 spaces
TOTAL	990 spaces (18 BF spaces)
PROVIDED	1003 spaces (47 BF spaces)

NOTES:
CONC. BARRIERS CURB AT THE EDGE OF ALL HARD SURFACES IS REQ.'D INCL. ADJACENT TO ALL NATURALIZED AREAS

FIRE VEHICLE ACCESS ROUTE SIGNS SHALL BE INSTALLED TO MEET THE REQUIREMENTS OF THE CITY OF OWEN SOUND FIRE ROUTE BYLAW.

INSTALL TACTILE SURFACE WALKING INDICATOR PLATES IN THE INTERSECTIONS BETWEEN THE CONCRETE SIDEWALK AND THE DESIGNATED CROSS WALK

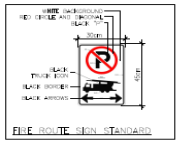

PLAN LEGEND			
CSW	CONCRETE SIDEWALK		FIRE ROUTE
TW	TACTILE WALKING SURFACE INDICATOR		SINGLE LIGHTPOLE
DC	DESIGNATED CROSSWALK		DOUBLE LIGHTPOLE
	FIRE HYDRANT AND VALVE		PYLON
	DIRECTION OF TRAFFIC FLOW		LANDSCAPE AREA
	BENCH		TYPE. ACCESSIBLE PARKING STALL TYPE "A"
	FIRE ROUTE SIGNS		TYP. ACCESSIBLE PARKING STALL TYPE "B"

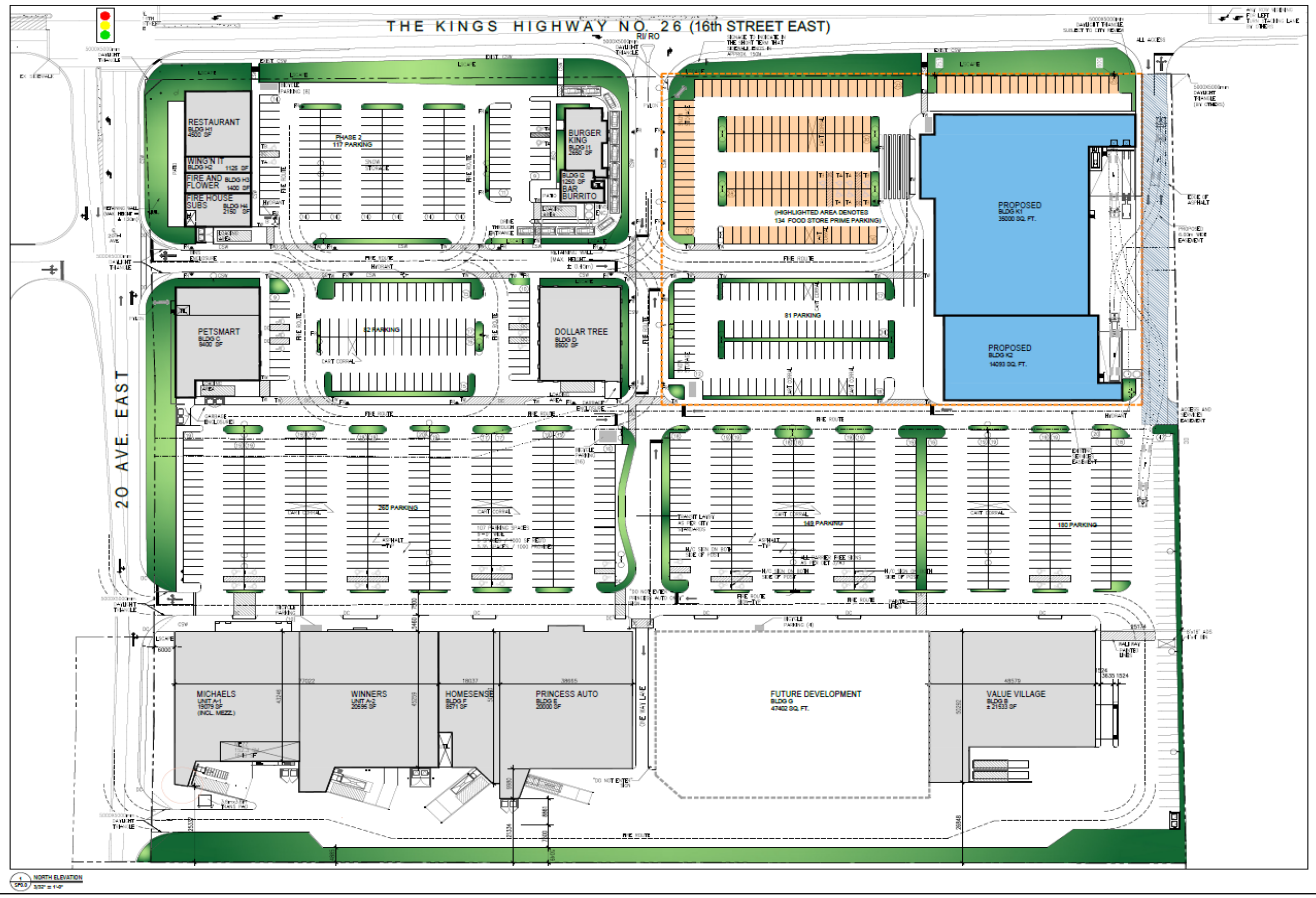

Greystone

REV.	DESCRIPTION	DATE
1	ISSUED FOR CLIENT REVIEW	2023.03.31
2	ISSUED FOR CLIENT REVIEW	2023.03.31

PROJECT FOR:
HERITAGE GROVE CENTRE INC.

PROJECT: SITE PLAN

HERITAGE GROVE CENTRE
2125 16TH ST. E
OWEN SOUND, ON

DRAWING: SITE PLAN

DRAWN:	CHECKED:	JOB NUMBER:
P.P.	G.P.	23031
DATE (YYYY.MM.DD): 2023.03.06	SCALE: AS SHOWN	
DRAWING NUMBER: SP1.0	REVISION NUMBER: R1	

Heritage Grove Trip Generation

Land Use	1,000 ft^2 GFA	AM Peak Hour				PM Peak Hour			
		Rate	In	Out	Total	Rate	In	Out	Total
LUC 821 - Shopping Plaza (40-150k) - Supermarket - No	61.50	1.73	66	40	**106**	5.19	156	163	**319**
LUC 850 - Supermarket	35.00	2.86	59	41	**100**	Eq	165	165	**330**
LUC 882 - Marijuana Dispensary	1.40	10.54	8	7	**15**	18.92	13	13	**26**
LUC 932 - High-Turnover (Sit-Down) Restaurant	4.50	9.57	24	19	**43**	9.05	25	16	**41**
Total Trip Generation			**157**	**107**	**264**		**359**	**357**	**716**
Internal Capture		*0%*	*0*	*0*	*0*	*4%*	*14*	*14*	*28*
LUC 821 Pass-by		*0%*	*0*	*0*	*0*	*40%*	*64*	*64*	*128*
LUC 850 Pass-by		*0%*	*0*	*0*	*0*	*24%*	*40*	*40*	*80*
LUC 932 - Pass-by		*0%*	*0*	*0*	*0*	*43%*	*9*	*9*	*18*
Net Trip Generation			**157**	**107**	**264**		**241**	**239**	**480**

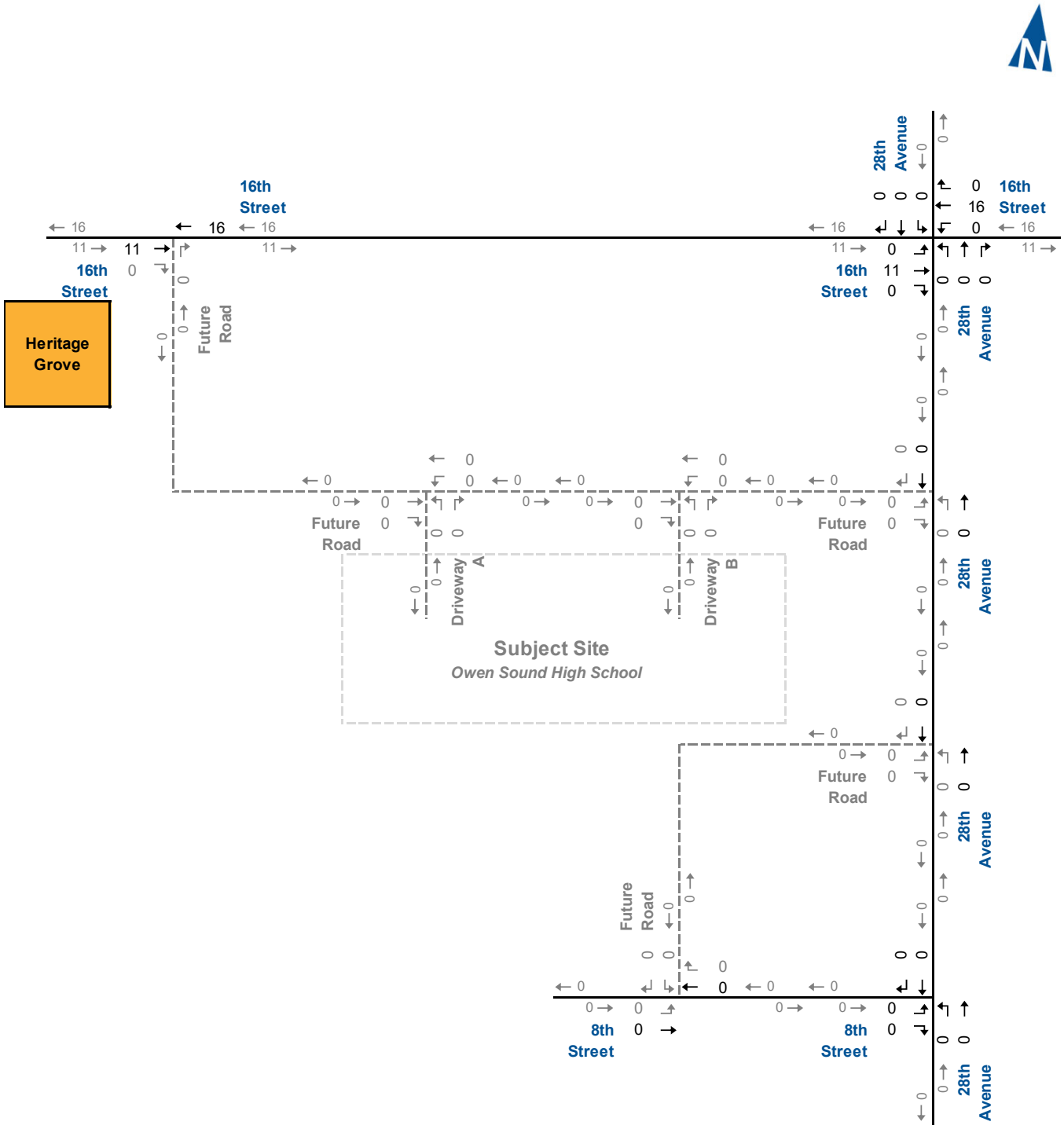

Background Development Traffic Volumes – AM Peak Hour Heritage Grove Centre

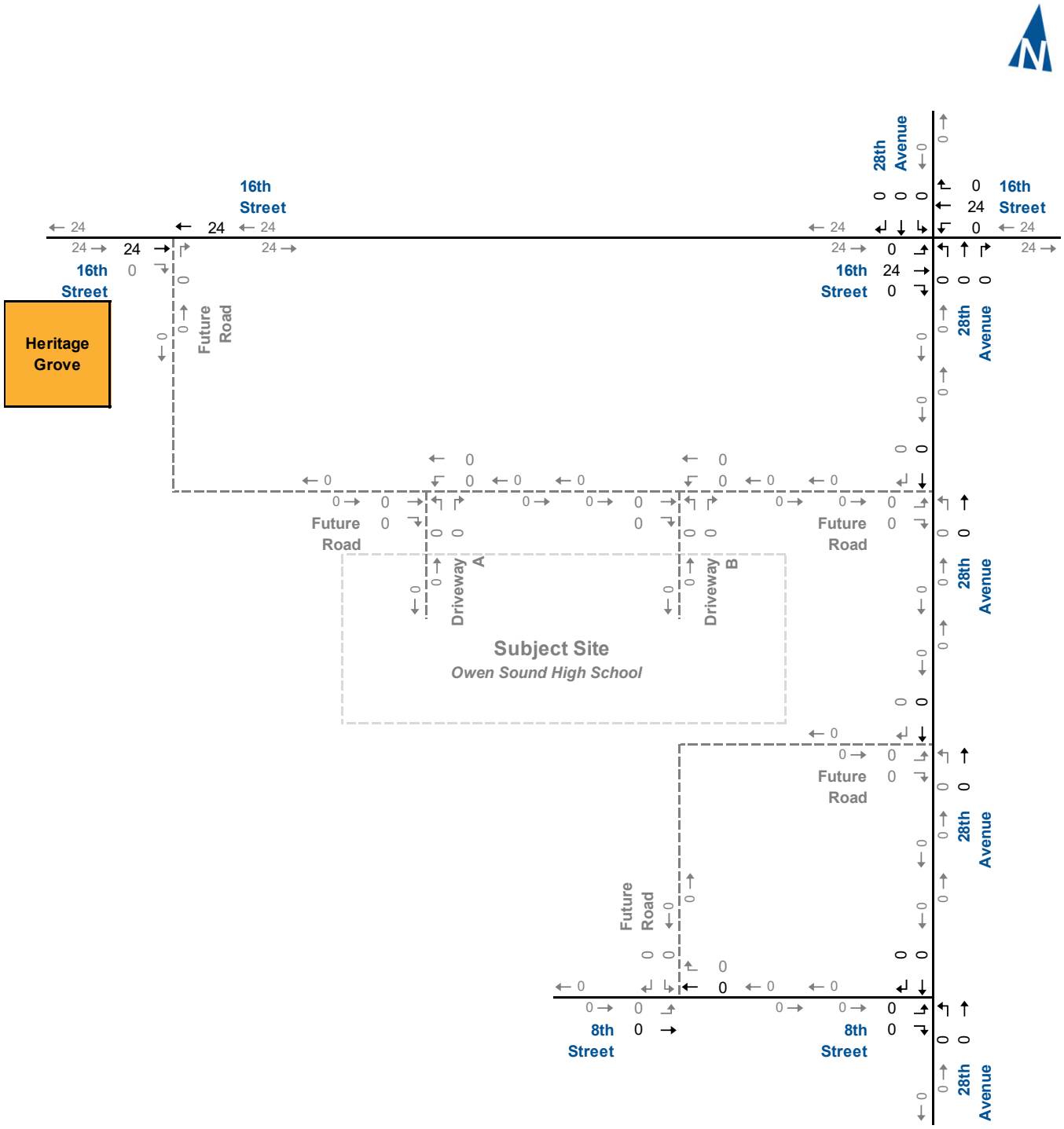

Background Development Traffic Volumes – PM Peak Hour Heritage Grove Centre

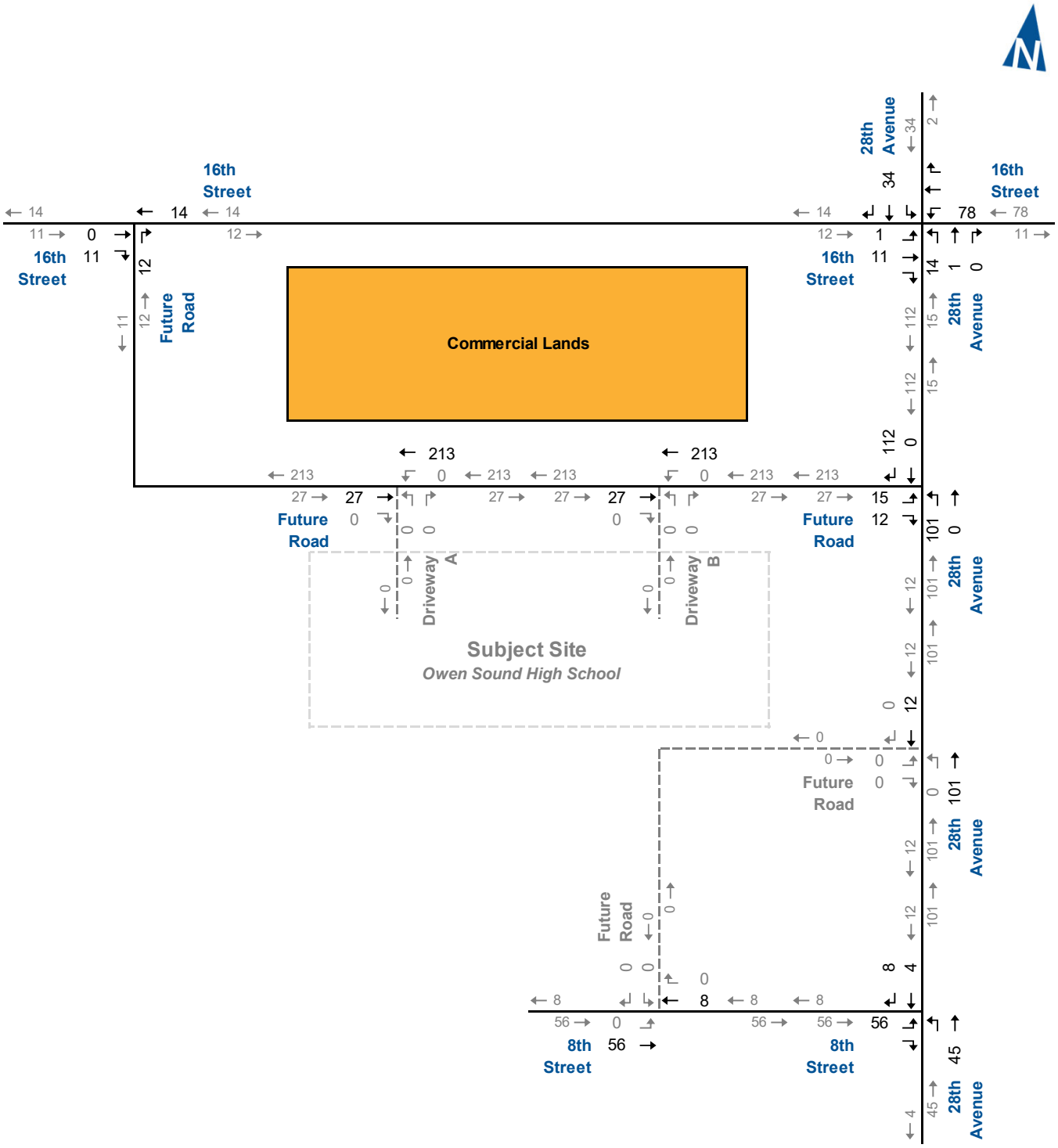

Background Development Traffic Volumes – AM Peak Hour 50% Commercial Lands

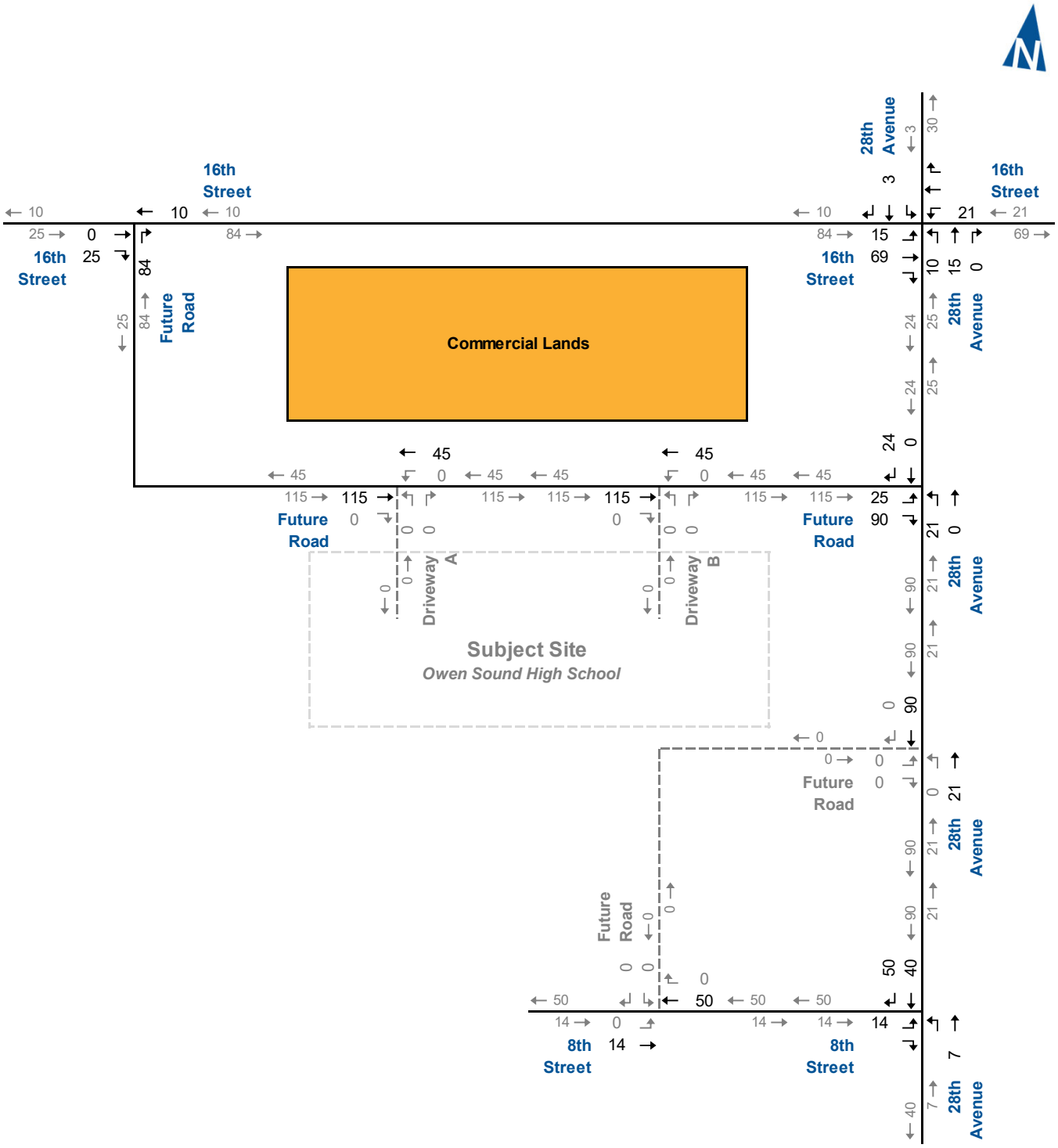

Background Development Traffic Volumes – PM Peak Hour 50% Commercial Lands

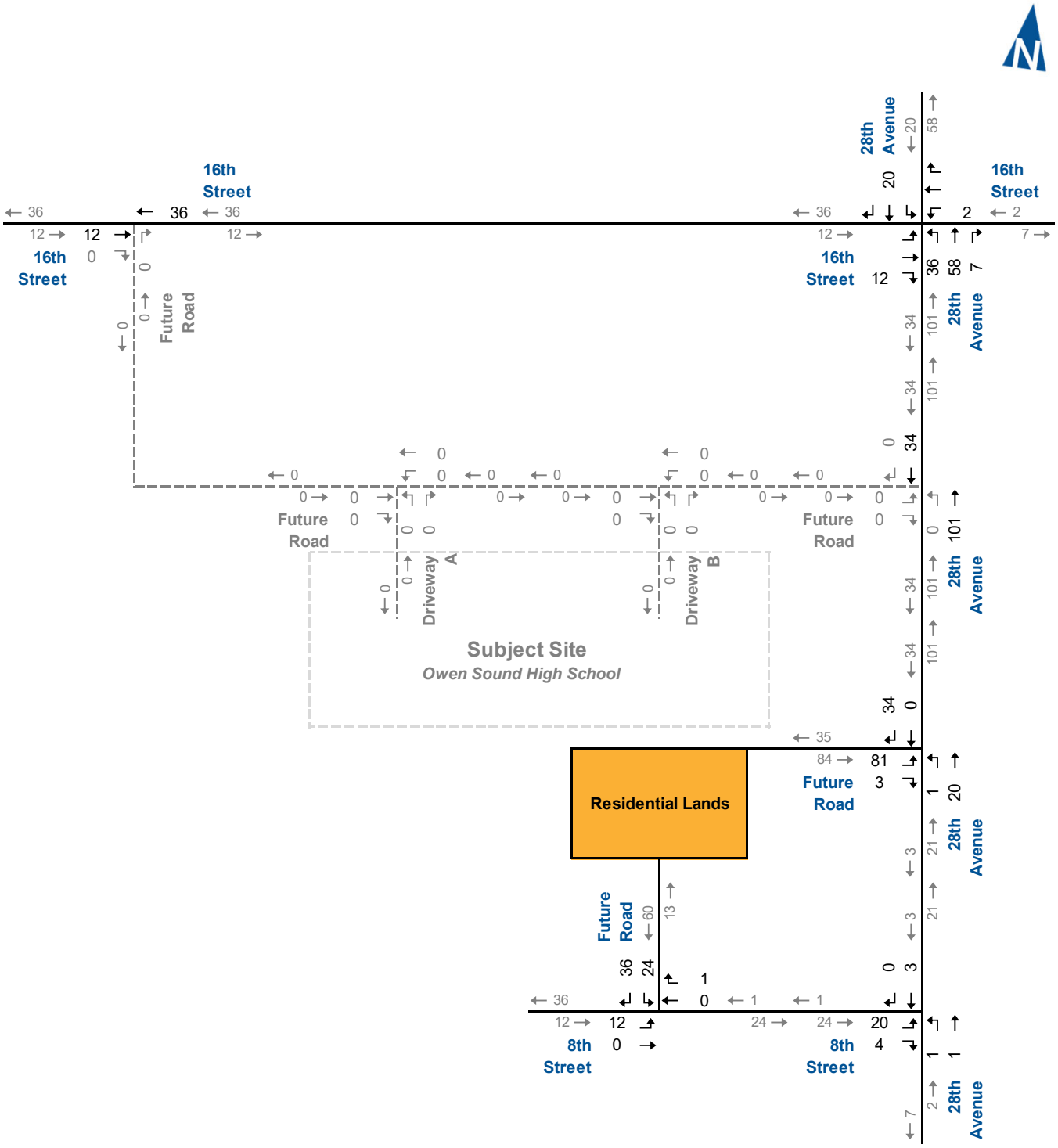

Background Development Traffic Volumes – AM Peak Hour 50% Residential Lands

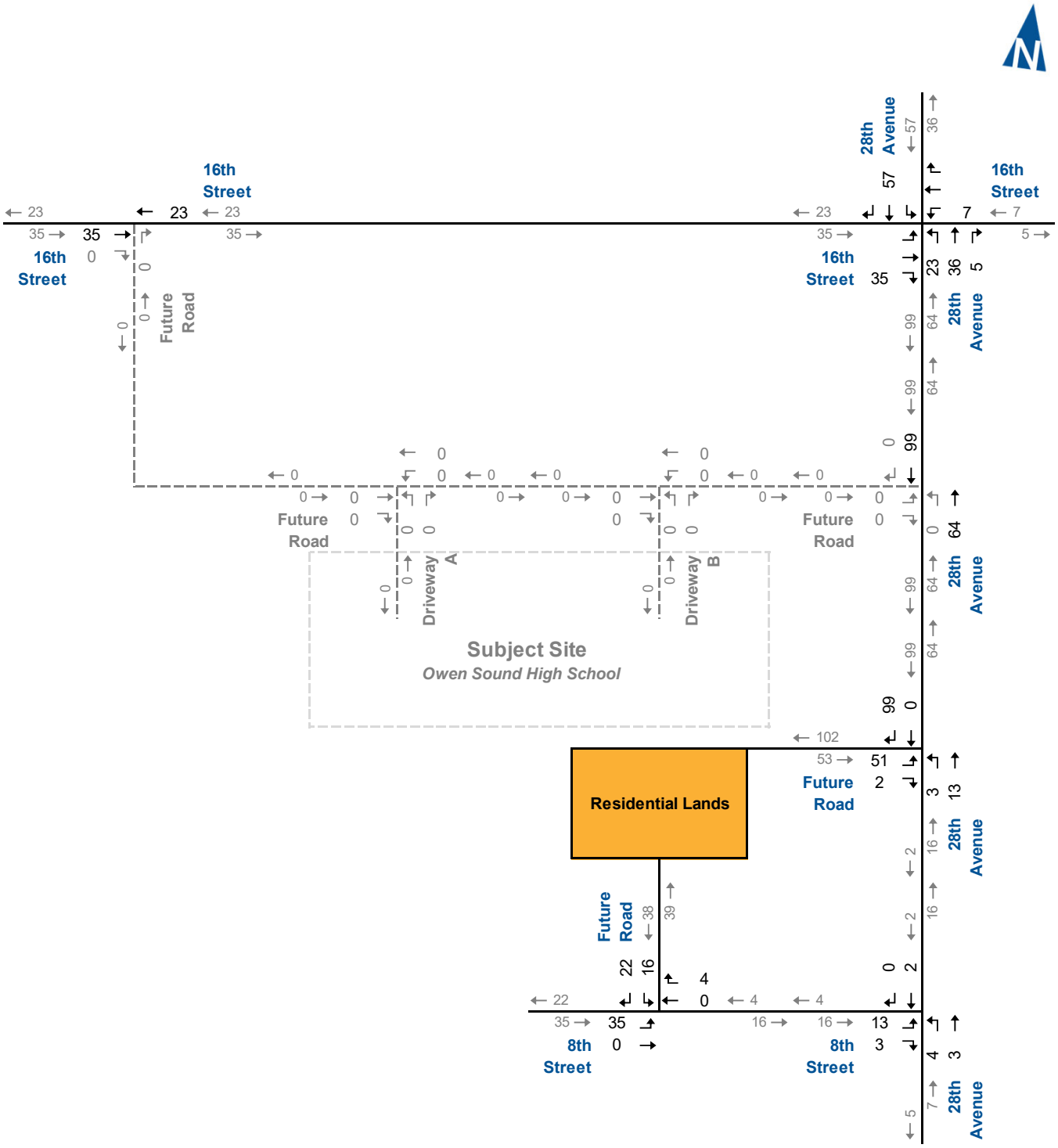

Background Development Traffic Volumes – PM Peak Hour 50% Residential Lands

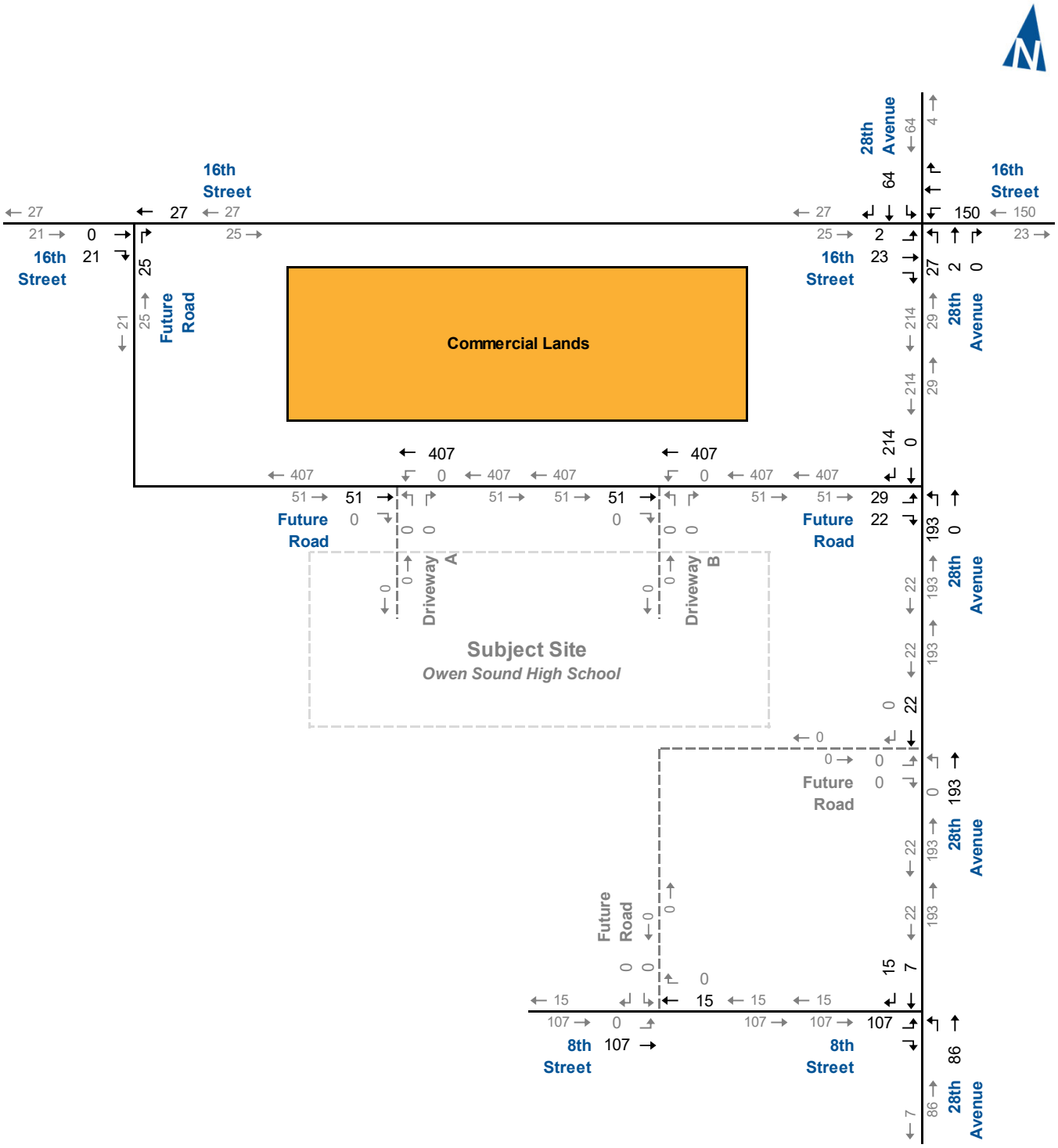

Background Development Traffic Volumes – AM Peak Hour 100% Commercial Lands

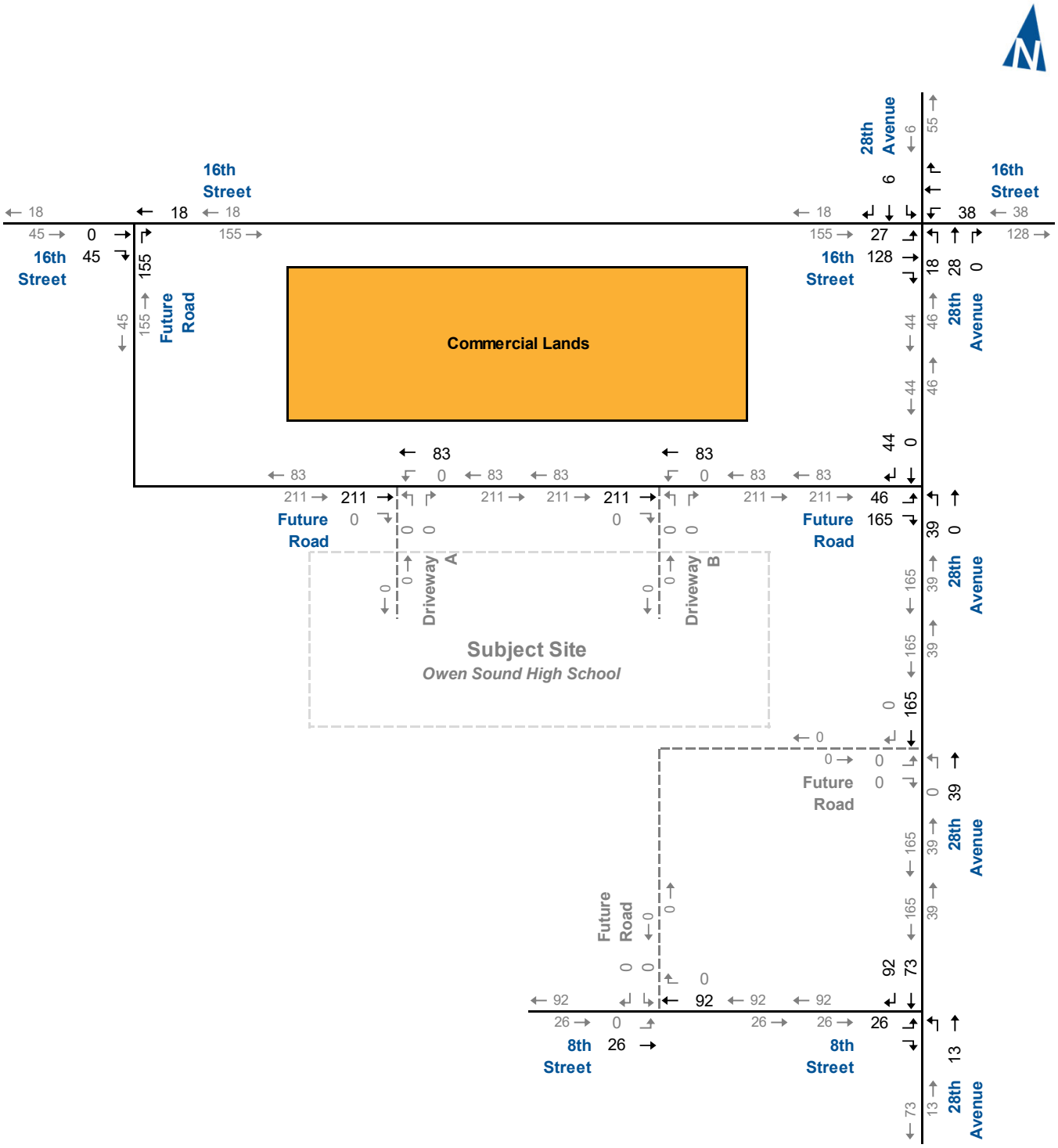

Background Development Traffic Volumes – PM Peak Hour 100% Commercial Lands

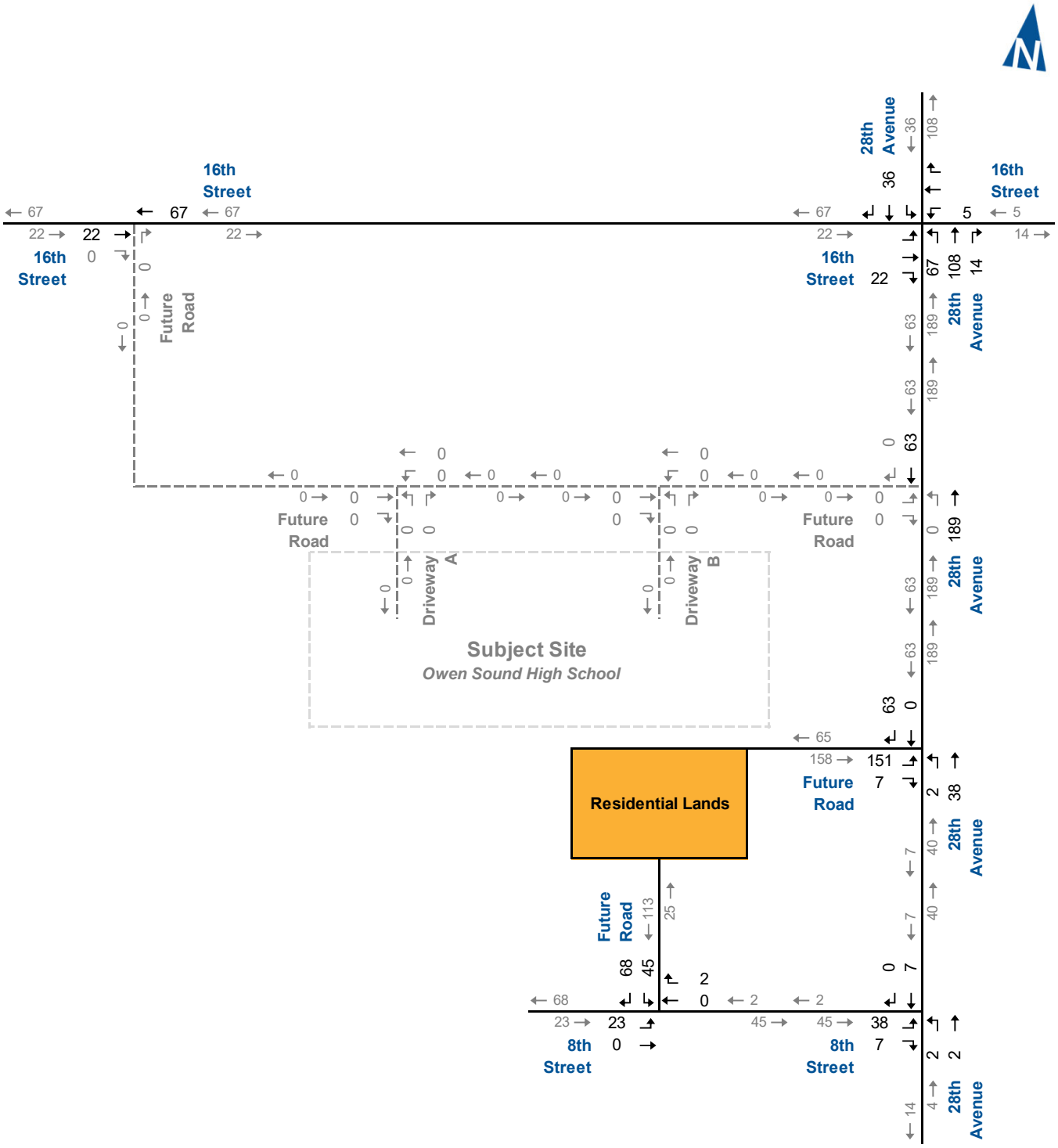

Background Development Traffic Volumes – AM Peak Hour 100% Residential Lands

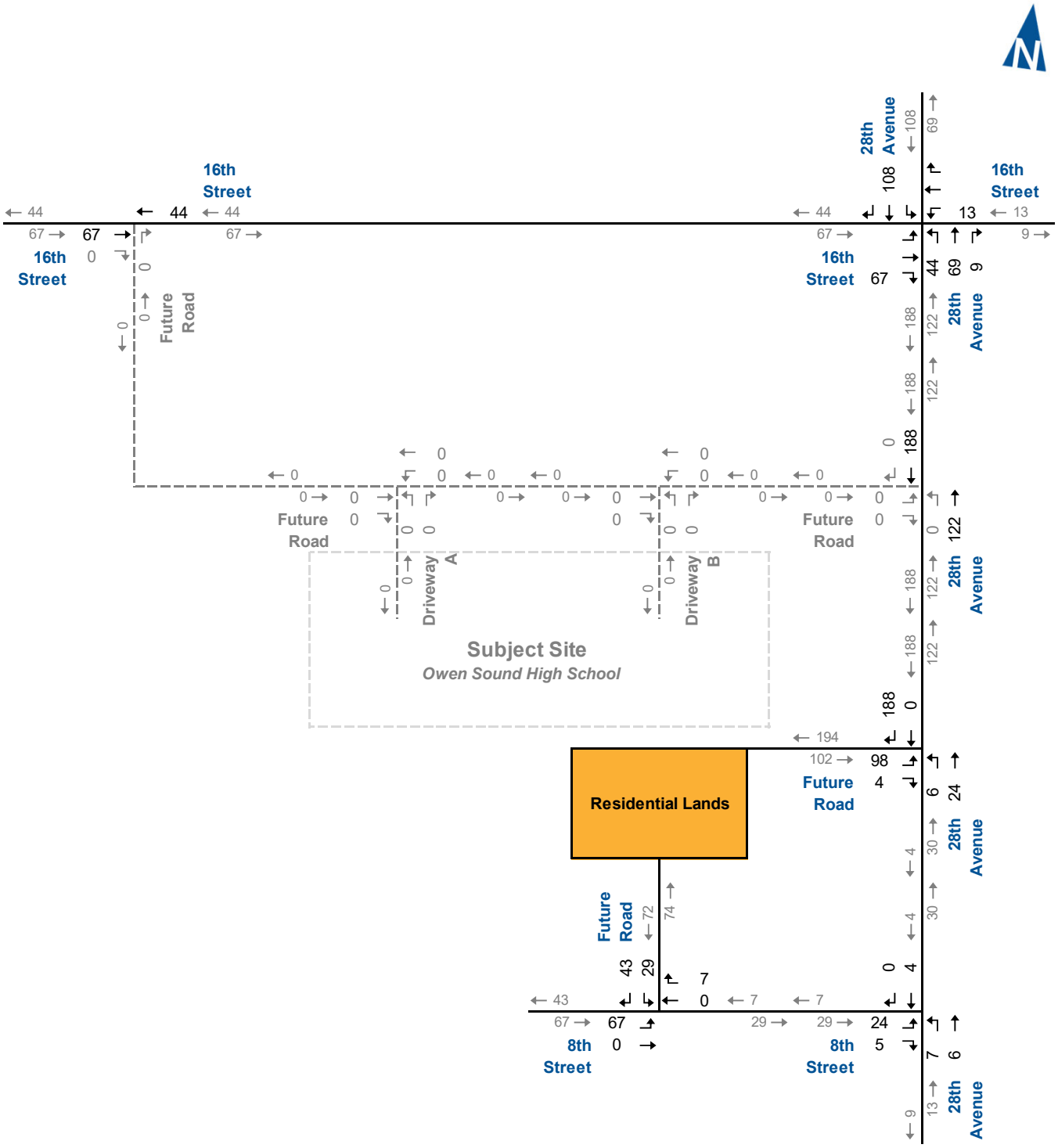

Background Development Traffic Volumes – PM Peak Hour 100% Residential Lands

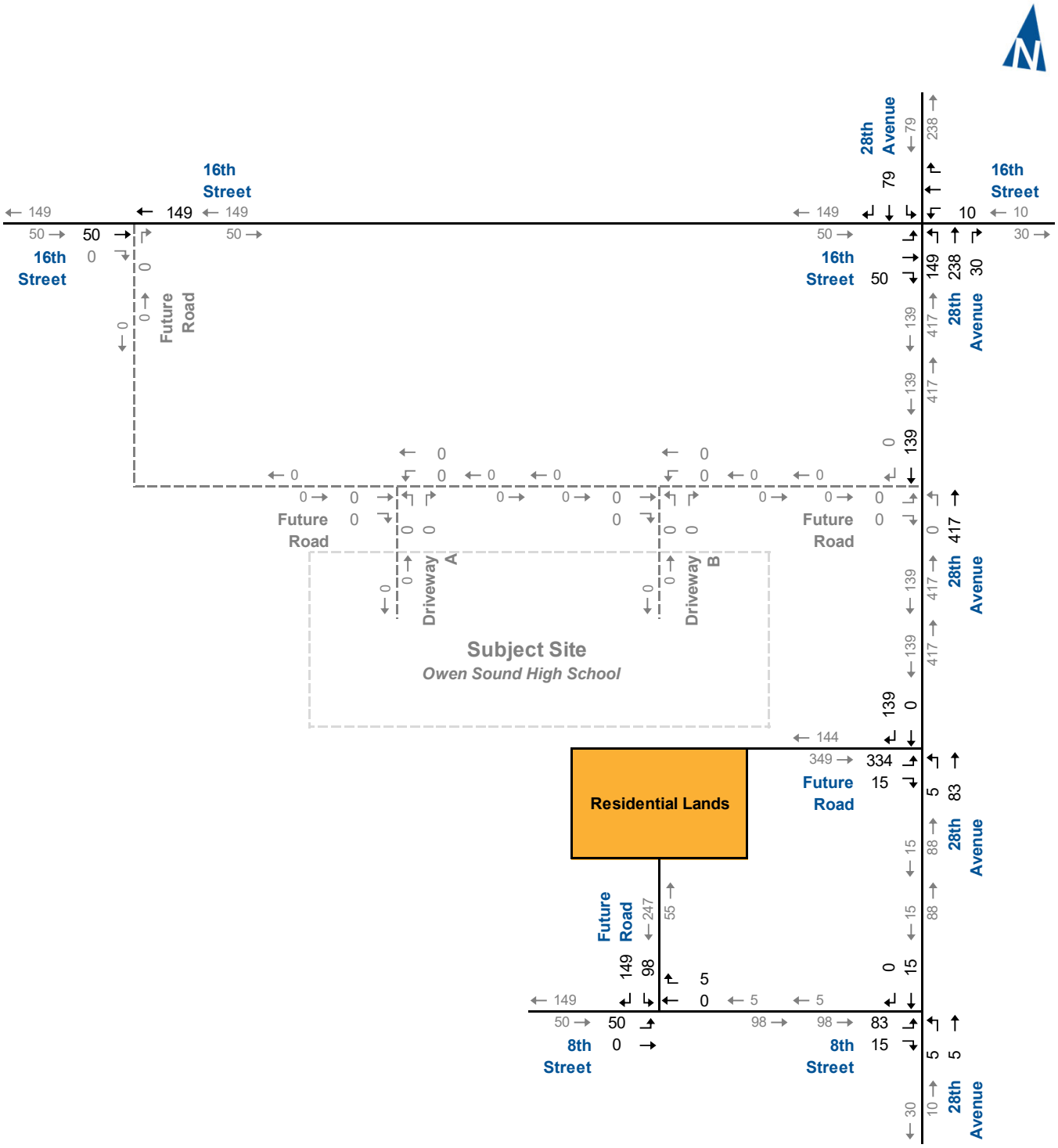

Background Development Traffic Volumes
AM Peak Hour
100% Residential Lands (Additional Scenario)

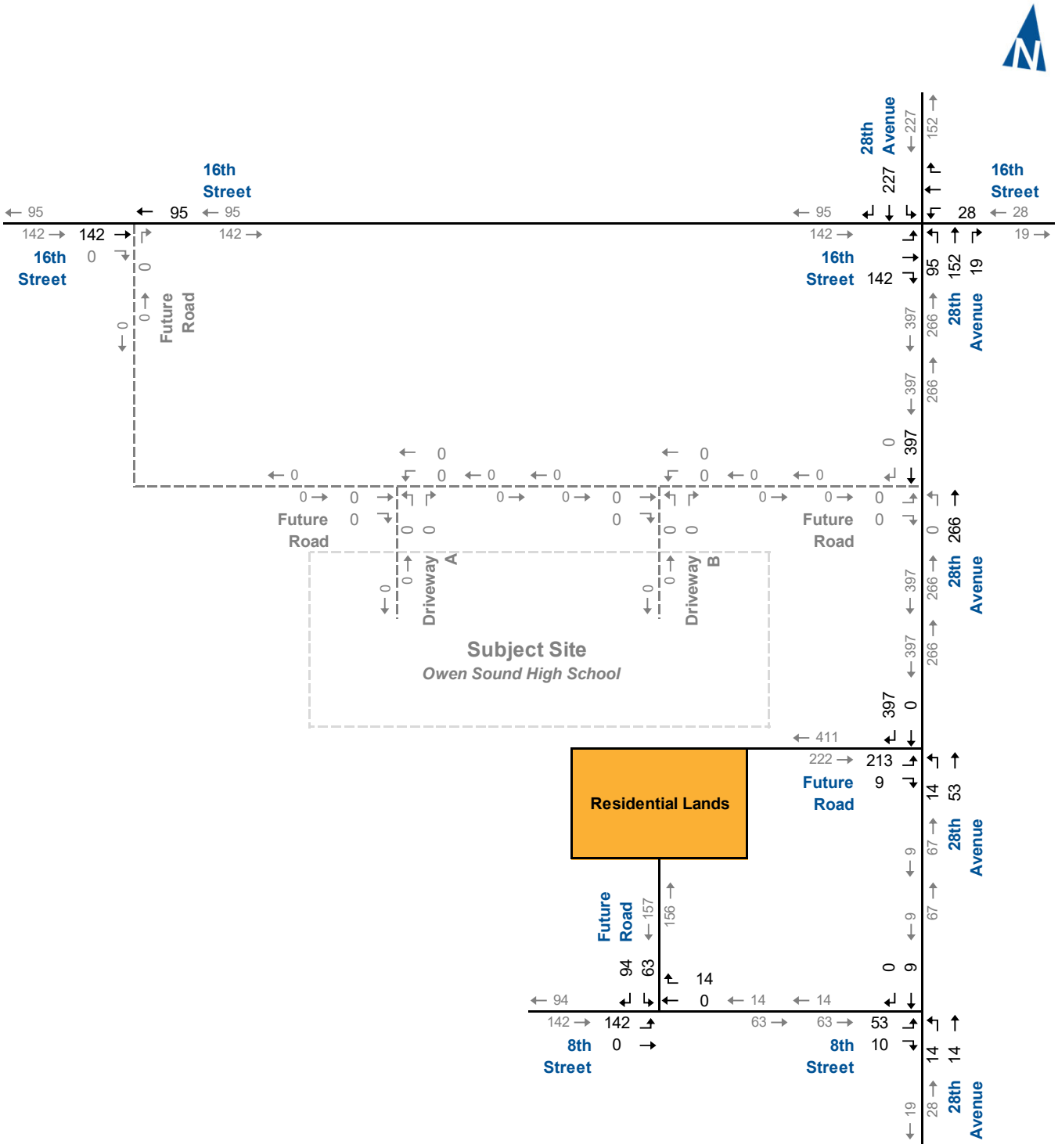

Background Development Traffic Volumes
PM Peak Hour
100% Residential Lands (Additional Scenario)

Appendix E

2028 Background Traffic Operations Reports

Lane Group	EBL	EBT	EBR	WBL	WBT	WBR	NBL	NBT	NBR	SBL	SBT	SBR
Lane Configurations												
Traffic Volume (vph)	41	159	10	164	284	58	21	46	59	44	17	16
Future Volume (vph)	41	159	10	164	284	58	21	46	59	44	17	16
Ideal Flow (vphpl)	1900	1900	1900	1900	1900	1900	1900	1900	1900	1900	1900	1900
Storage Length (m)	70.0		70.0	120.0		0.0	55.0		0.0	55.0		0.0
Storage Lanes	1		1	1		0	1		0	1		0
Taper Length (m)	100.0			100.0			100.0			100.0		
Lane Util. Factor	1.00	1.00	1.00	1.00	1.00	1.00	1.00	1.00	1.00	1.00	1.00	1.00
Frt			0.850		0.975			0.916			0.927	
Flt Protected	0.950			0.950			0.950			0.950		
Satd. Flow (prot)	1805	1810	1468	1787	1720	0	1641	1670	0	1492	1537	0
Flt Permitted	0.540			0.570			0.734			0.684		
Satd. Flow (perm)	1026	1810	1468	1072	1720	0	1268	1670	0	1074	1537	0
Right Turn on Red			Yes			Yes			Yes			Yes
Satd. Flow (RTOR)			65		17			64			17	
Link Speed (k/h)		50			50			80			50	
Link Distance (m)		405.7			474.4			304.1			233.9	
Travel Time (s)		29.2			34.2			13.7			16.8	
Peak Hour Factor	0.92	0.92	0.92	0.92	0.92	0.92	0.92	0.92	0.92	0.92	0.92	0.92
Heavy Vehicles (%)	0%	5%	10%	1%	4%	26%	10%	7%	2%	21%	19%	10%
Adj. Flow (vph)	45	173	11	178	309	63	23	50	64	48	18	17
Shared Lane Traffic (%)												
Lane Group Flow (vph)	45	173	11	178	372	0	23	114	0	48	35	0
Turn Type	Perm	NA	Perm	pm+pt	NA		Perm	NA		Perm	NA	
Protected Phases		2		1	6			8			4	
Permitted Phases	2		2	6			8			4		
Detector Phase	2	2	2	1	6		8	8		4	4	
Switch Phase												
Minimum Initial (s)	20.0	20.0	20.0	5.0	20.0		10.0	10.0		10.0	10.0	
Minimum Split (s)	36.0	36.0	36.0	8.0	36.0		29.0	29.0		29.0	29.0	
Total Split (s)	52.0	52.0	52.0	12.0	64.0		36.0	36.0		36.0	36.0	
Total Split (%)	52.0%	52.0%	52.0%	12.0%	64.0%		36.0%	36.0%		36.0%	36.0%	
Maximum Green (s)	45.0	45.0	45.0	9.0	57.0		30.0	30.0		30.0	30.0	
Yellow Time (s)	5.4	5.4	5.4	3.0	5.4		4.1	4.1		4.1	4.1	
All-Red Time (s)	1.6	1.6	1.6	0.0	1.6		1.9	1.9		1.9	1.9	
Lost Time Adjust (s)	0.0	0.0	0.0	0.0	0.0		0.0	0.0		0.0	0.0	
Total Lost Time (s)	7.0	7.0	7.0	3.0	7.0		6.0	6.0		6.0	6.0	
Lead/Lag	Lag	Lag	Lag	Lead								
Lead-Lag Optimize?	Yes	Yes	Yes	Yes								
Vehicle Extension (s)	4.5	4.5	4.5	2.0	4.5		3.0	3.0		3.0	3.0	
Recall Mode	Min	Min	Min	None	Min		None	None		None	None	
Walk Time (s)	17.0	17.0	17.0		17.0		12.0	12.0		12.0	12.0	
Flash Dont Walk (s)	12.0	12.0	12.0		12.0		7.0	7.0		7.0	7.0	
Pedestrian Calls (#/hr)	0	0	0		0		0	0		0	0	
Act Effct Green (s)	24.3	24.3	24.3	33.6	31.6		10.6	10.6		10.6	10.6	
Actuated g/C Ratio	0.50	0.50	0.50	0.69	0.65		0.22	0.22		0.22	0.22	
v/c Ratio	0.09	0.19	0.01	0.21	0.33		0.08	0.27		0.20	0.10	
Control Delay	11.9	12.4	0.0	4.4	6.8		19.1	12.2		21.2	13.6	
Queue Delay	0.0	0.0	0.0	0.0	0.0		0.0	0.0		0.0	0.0	

Lane Group	EBL	EBT	EBR	WBL	WBT	WBR	NBL	NBT	NBR	SBL	SBT	SBR
Total Delay	11.9	12.4	0.0	4.4	6.8		19.1	12.2		21.2	13.6	
LOS	B	B	A	A	A		B	B		C	B	
Approach Delay		11.7			6.0			13.3			18.0	
Approach LOS		B			A			B			B	
Queue Length 50th (m)	2.8	11.3	0.0	5.7	16.9		1.9	4.2		4.1	1.5	
Queue Length 95th (m)	8.8	24.5	0.0	11.6	31.4		7.1	15.8		12.2	7.8	
Internal Link Dist (m)		381.7			450.4			280.1			209.9	
Turn Bay Length (m)	70.0		70.0	120.0			55.0			55.0		
Base Capacity (vph)	927	1636	1333	882	1720		826	1110		699	1007	
Starvation Cap Reductn	0	0	0	0	0		0	0		0	0	
Spillback Cap Reductn	0	0	0	0	0		0	0		0	0	
Storage Cap Reductn	0	0	0	0	0		0	0		0	0	
Reduced v/c Ratio	0.05	0.11	0.01	0.20	0.22		0.03	0.10		0.07	0.03	

Intersection Summary			
Area Type:	Other		
Cycle Length: 100			
Actuated Cycle Length: 48.5			
Natural Cycle: 75			
Control Type: Semi Act-Uncoord			
Maximum v/c Ratio: 0.33			
Intersection Signal Delay: 9.3		Intersection LOS: A	
Intersection Capacity Utilization 60.9%		ICU Level of Service B	
Analysis Period (min) 15			

Splits and Phases: 2: 28th Avenue & 16th Street

Movement	EBL	EBT	EBR	WBL	WBT	WBR	NBL	NBT	NBR	SBL	SBT	SBR
Lane Configurations												
Traffic Volume (veh/h)	41	159	10	164	284	58	21	46	59	44	17	16
Future Volume (veh/h)	41	159	10	164	284	58	21	46	59	44	17	16
Initial Q (Qb), veh	0	0	0	0	0	0	0	0	0	0	0	0
Ped-Bike Adj(A_pbT)	1.00		1.00	1.00		1.00	1.00		1.00	1.00		1.00
Parking Bus, Adj	1.00	1.00	1.00	1.00	1.00	1.00	1.00	1.00	1.00	1.00	1.00	1.00
Work Zone On Approach		No			No			No			No	
Adj Sat Flow, veh/h/ln	1900	1826	1752	1885	1841	1515	1752	1796	1870	1589	1618	1752
Adj Flow Rate, veh/h	45	173	11	178	309	63	23	50	64	48	18	17
Peak Hour Factor	0.92	0.92	0.92	0.92	0.92	0.92	0.92	0.92	0.92	0.92	0.92	0.92
Percent Heavy Veh, %	0	5	10	1	4	26	10	7	2	21	19	10
Cap, veh/h	553	729	592	714	817	166	363	136	174	284	146	138
Arrive On Green	0.40	0.40	0.40	0.09	0.55	0.55	0.19	0.19	0.19	0.19	0.19	0.19
Sat Flow, veh/h	1026	1826	1485	1795	1484	303	1286	716	916	1086	765	723
Grp Volume(v), veh/h	45	173	11	178	0	372	23	0	114	48	0	35
Grp Sat Flow(s),veh/h/ln	1026	1826	1485	1795	0	1786	1286	0	1631	1086	0	1488
Q Serve(g_s), s	1.4	3.2	0.2	2.6	0.0	5.9	0.8	0.0	3.0	2.0	0.0	1.0
Cycle Q Clear(g_c), s	1.4	3.2	0.2	2.6	0.0	5.9	1.7	0.0	3.0	5.1	0.0	1.0
Prop In Lane	1.00		1.00	1.00		0.17	1.00		0.56	1.00		0.49
Lane Grp Cap(c), veh/h	553	729	592	714	0	983	363	0	310	284	0	283
V/C Ratio(X)	0.08	0.24	0.02	0.25	0.00	0.38	0.06	0.00	0.37	0.17	0.00	0.12
Avail Cap(c_a), veh/h	1065	1640	1333	873	0	2032	889	0	977	728	0	891
HCM Platoon Ratio	1.00	1.00	1.00	1.00	1.00	1.00	1.00	1.00	1.00	1.00	1.00	1.00
Upstream Filter(I)	1.00	1.00	1.00	1.00	0.00	1.00	1.00	0.00	1.00	1.00	0.00	1.00
Uniform Delay (d), s/veh	9.5	10.0	9.1	6.4	0.0	6.4	17.5	0.0	17.7	19.9	0.0	16.8
Incr Delay (d2), s/veh	0.1	0.3	0.0	0.1	0.0	0.4	0.1	0.0	0.7	0.3	0.0	0.2
Initial Q Delay(d3),s/veh	0.0	0.0	0.0	0.0	0.0	0.0	0.0	0.0	0.0	0.0	0.0	0.0
%ile BackOfQ(50%),veh/ln	0.0	0.1	0.0	0.0	0.0	0.1	0.0	0.0	0.1	0.1	0.0	0.0
Unsig. Movement Delay, s/veh												
LnGrp Delay(d),s/veh	9.6	10.3	9.1	6.5	0.0	6.8	17.6	0.0	18.4	20.1	0.0	17.0
LnGrp LOS	A	B	A	A	A	A	B	A	B	C	A	B
Approach Vol, veh/h		229			550			137			83	
Approach Delay, s/veh		10.1			6.7			18.3			18.8	
Approach LOS		B			A			B			B	

Timer - Assigned Phs	1	2		4		6		8
Phs Duration (G+Y+Rc), s	7.6	27.0		15.5		34.6		15.5
Change Period (Y+Rc), s	3.0	* 7		* 6		* 7		* 6
Max Green Setting (Gmax), s	9.0	* 45		* 30		* 57		* 30
Max Q Clear Time (g_c+I1), s	4.6	5.2		7.1		7.9		5.0
Green Ext Time (p_c), s	0.2	2.7		0.4		5.4		0.8

Intersection Summary		
HCM 6th Ctrl Delay		10.1
HCM 6th LOS		B

Notes

* HCM 6th computational engine requires equal clearance times for the phases crossing the barrier.

Lane Group	EBL	EBR	NBL	NBT	SBT	SBR
Lane Configurations						
Traffic Volume (vph)	47	18	81	80	44	149
Future Volume (vph)	47	18	81	80	44	149
Ideal Flow (vphpl)	1900	1900	1900	1900	1900	1900
Storage Length (m)	0.0	20.0	0.0			0.0
Storage Lanes	1	1	0			0
Taper Length (m)	7.5		7.5			
Lane Util. Factor	1.00	1.00	1.00	1.00	1.00	1.00
Frt		0.850			0.896	
Flt Protected	0.950			0.975		
Satd. Flow (prot)	1805	1615	0	1740	1652	0
Flt Permitted	0.950			0.975		
Satd. Flow (perm)	1805	1615	0	1740	1652	0
Link Speed (k/h)	80			60	80	
Link Distance (m)	310.5			265.1	256.5	
Travel Time (s)	14.0			15.9	11.5	
Peak Hour Factor	0.92	0.92	0.92	0.92	0.92	0.92
Heavy Vehicles (%)	0%	0%	5%	8%	10%	1%
Adj. Flow (vph)	51	20	88	87	48	162
Shared Lane Traffic (%)						
Lane Group Flow (vph)	51	20	0	175	210	0
Sign Control	Stop			Free	Free	

Intersection Summary		
Area Type:	Other	
Control Type: Unsignalized		
Intersection Capacity Utilization 33.5%		ICU Level of Service A
Analysis Period (min) 15		

Intersection	
Int Delay, s/veh	3.2

Movement	EBL	EBR	NBL	NBT	SBT	SBR
Lane Configurations						
Traffic Vol, veh/h	47	18	81	80	44	149
Future Vol, veh/h	47	18	81	80	44	149
Conflicting Peds, #/hr	0	0	0	0	0	0
Sign Control	Stop	Stop	Free	Free	Free	Free
RT Channelized	-	None	-	None	-	Yield
Storage Length	0	20	-	-	-	-
Veh in Median Storage, #	0	-	-	0	0	-
Grade, %	0	-	-	0	0	-
Peak Hour Factor	92	92	92	92	92	92
Heavy Vehicles, %	0	0	5	8	10	1
Mvmt Flow	51	20	88	87	48	162

Major/Minor	Minor2		Major1		Major2	
Conflicting Flow All	392	129	48	0	-	0
Stage 1	129	-	-	-	-	-
Stage 2	263	-	-	-	-	-
Critical Hdwy	6.4	6.2	4.15	-	-	-
Critical Hdwy Stg 1	5.4	-	-	-	-	-
Critical Hdwy Stg 2	5.4	-	-	-	-	-
Follow-up Hdwy	3.5	3.3	2.245	-	-	-
Pot Cap-1 Maneuver	616	926	1540	-	-	-
Stage 1	902	-	-	-	-	-
Stage 2	786	-	-	-	-	-
Platoon blocked, %				-	-	-
Mov Cap-1 Maneuver	579	926	1540	-	-	-
Mov Cap-2 Maneuver	579	-	-	-	-	-
Stage 1	848	-	-	-	-	-
Stage 2	786	-	-	-	-	-

Approach	EB	NB	SB
HCM Control Delay, s	11	3.8	0
HCM LOS	B		

Minor Lane/Major Mvmt	NBL	NBT	EBLn1	EBLn2	SBT	SBR
Capacity (veh/h)	1540	-	579	926	-	-
HCM Lane V/C Ratio	0.057	-	0.088	0.021	-	-
HCM Control Delay (s)	7.5	0	11.8	9	-	-
HCM Lane LOS	A	A	B	A	-	-
HCM 95th %tile Q(veh)	0.2	-	0.3	0.1	-	-

Lane Group	EBL	EBT	EBR	WBL	WBT	WBR	NBL	NBT	NBR	SBL	SBT	SBR
Lane Configurations												
Traffic Volume (vph)	16	338	46	85	254	55	25	49	125	46	54	55
Future Volume (vph)	16	338	46	85	254	55	25	49	125	46	54	55
Ideal Flow (vphpl)	1900	1900	1900	1900	1900	1900	1900	1900	1900	1900	1900	1900
Storage Length (m)	70.0		70.0	120.0		0.0	55.0		0.0	55.0		0.0
Storage Lanes	1		1	1		0	1		0	1		0
Taper Length (m)	100.0			100.0			100.0			100.0		
Lane Util. Factor	1.00	1.00	1.00	1.00	1.00	1.00	1.00	1.00	1.00	1.00	1.00	1.00
Frt			0.850		0.973			0.892			0.924	
Flt Protected	0.950			0.950			0.950			0.950		
Satd. Flow (prot)	1626	1863	1615	1719	1686	0	1736	1618	0	1687	1648	0
Flt Permitted	0.558			0.453			0.681			0.639		
Satd. Flow (perm)	955	1863	1615	820	1686	0	1244	1618	0	1135	1648	0
Right Turn on Red			Yes			Yes			Yes			Yes
Satd. Flow (RTOR)			65		18			132			52	
Link Speed (k/h)		50			50			80			50	
Link Distance (m)		405.7			474.4			304.1			233.9	
Travel Time (s)		29.2			34.2			13.7			16.8	
Peak Hour Factor	0.92	0.92	0.92	0.92	0.92	0.92	0.92	0.92	0.92	0.92	0.92	0.92
Heavy Vehicles (%)	11%	2%	0%	5%	5%	31%	4%	17%	0%	7%	0%	13%
Adj. Flow (vph)	17	367	50	92	276	60	27	53	136	50	59	60
Shared Lane Traffic (%)												
Lane Group Flow (vph)	17	367	50	92	336	0	27	189	0	50	119	0
Turn Type	Perm	NA	Perm	pm+pt	NA		Perm	NA		Perm	NA	
Protected Phases		2		1	6			8			4	
Permitted Phases	2		2	6			8			4		
Detector Phase	2	2	2	1	6		8	8		4	4	
Switch Phase												
Minimum Initial (s)	20.0	20.0	20.0	5.0	20.0		10.0	10.0		10.0	10.0	
Minimum Split (s)	36.0	36.0	36.0	8.0	36.0		29.0	29.0		29.0	29.0	
Total Split (s)	52.0	52.0	52.0	12.0	64.0		36.0	36.0		36.0	36.0	
Total Split (%)	52.0%	52.0%	52.0%	12.0%	64.0%		36.0%	36.0%		36.0%	36.0%	
Maximum Green (s)	45.0	45.0	45.0	9.0	57.0		30.0	30.0		30.0	30.0	
Yellow Time (s)	5.4	5.4	5.4	3.0	5.4		4.1	4.1		4.1	4.1	
All-Red Time (s)	1.6	1.6	1.6	0.0	1.6		1.9	1.9		1.9	1.9	
Lost Time Adjust (s)	0.0	0.0	0.0	0.0	0.0		0.0	0.0		0.0	0.0	
Total Lost Time (s)	7.0	7.0	7.0	3.0	7.0		6.0	6.0		6.0	6.0	
Lead/Lag	Lag	Lag	Lag	Lead								
Lead-Lag Optimize?	Yes	Yes	Yes	Yes								
Vehicle Extension (s)	4.5	4.5	4.5	2.0	4.5		3.0	3.0		3.0	3.0	
Recall Mode	Min	Min	Min	None	Min		None	None		None	None	
Walk Time (s)	17.0	17.0	17.0		17.0		12.0	12.0		12.0	12.0	
Flash Dont Walk (s)	12.0	12.0	12.0		12.0		7.0	7.0		7.0	7.0	
Pedestrian Calls (#/hr)	0	0	0		0		0	0		0	0	
Act Effct Green (s)	21.0	21.0	21.0	31.9	27.9		10.6	10.6		10.6	10.6	
Actuated g/C Ratio	0.41	0.41	0.41	0.62	0.54		0.21	0.21		0.21	0.21	
v/c Ratio	0.04	0.48	0.07	0.15	0.37		0.11	0.43		0.22	0.31	
Control Delay	10.9	14.8	3.0	4.5	7.6		19.6	11.1		21.4	14.7	
Queue Delay	0.0	0.0	0.0	0.0	0.0		0.0	0.0		0.0	0.0	

Lane Group	EBL	EBT	EBR	WBL	WBT	WBR	NBL	NBT	NBR	SBL	SBT	SBR
Total Delay	10.9	14.8	3.0	4.5	7.6		19.6	11.1		21.4	14.7	
LOS	B	B	A	A	A		B	B		C	B	
Approach Delay		13.3			6.9			12.2			16.7	
Approach LOS		B			A			B			B	
Queue Length 50th (m)	1.0	26.0	0.0	2.8	14.9		2.2	4.7		4.1	5.5	
Queue Length 95th (m)	4.4	51.2	4.2	7.6	30.6		8.4	20.7		13.2	18.8	
Internal Link Dist (m)		381.7			450.4			280.1			209.9	
Turn Bay Length (m)	70.0		70.0	120.0			55.0			55.0		
Base Capacity (vph)	859	1675	1459	665	1667		731	1005		667	990	
Starvation Cap Reductn	0	0	0	0	0		0	0		0	0	
Spillback Cap Reductn	0	0	0	0	0		0	0		0	0	
Storage Cap Reductn	0	0	0	0	0		0	0		0	0	
Reduced v/c Ratio	0.02	0.22	0.03	0.14	0.20		0.04	0.19		0.07	0.12	

Intersection Summary			
Area Type:	Other		
Cycle Length: 100			
Actuated Cycle Length: 51.6			
Natural Cycle: 75			
Control Type: Semi Act-Uncoord			
Maximum v/c Ratio: 0.48			
Intersection Signal Delay: 11.4		Intersection LOS: B	
Intersection Capacity Utilization 73.6%		ICU Level of Service D	
Analysis Period (min) 15			

Splits and Phases: 2: 28th Avenue & 16th Street

Movement	EBL	EBT	EBR	WBL	WBT	WBR	NBL	NBT	NBR	SBL	SBT	SBR
Lane Configurations												
Traffic Volume (veh/h)	16	338	46	85	254	55	25	49	125	46	54	55
Future Volume (veh/h)	16	338	46	85	254	55	25	49	125	46	54	55
Initial Q (Qb), veh	0	0	0	0	0	0	0	0	0	0	0	0
Ped-Bike Adj(A_pbT)	1.00		1.00	1.00		1.00	1.00		1.00	1.00		1.00
Parking Bus, Adj	1.00	1.00	1.00	1.00	1.00	1.00	1.00	1.00	1.00	1.00	1.00	1.00
Work Zone On Approach		No			No			No			No	
Adj Sat Flow, veh/h/ln	1737	1870	1900	1826	1826	1441	1841	1648	1900	1796	1900	1707
Adj Flow Rate, veh/h	17	367	50	92	276	60	27	53	136	50	59	60
Peak Hour Factor	0.92	0.92	0.92	0.92	0.92	0.92	0.92	0.92	0.92	0.92	0.92	0.92
Percent Heavy Veh, %	11	2	0	5	5	31	4	17	0	7	0	13
Cap, veh/h	527	741	638	502	766	167	340	88	226	256	186	189
Arrive On Green	0.40	0.40	0.40	0.07	0.53	0.53	0.22	0.22	0.22	0.22	0.22	0.22
Sat Flow, veh/h	970	1870	1610	1739	1453	316	1253	409	1050	1147	864	878
Grp Volume(v), veh/h	17	367	50	92	0	336	27	0	189	50	0	119
Grp Sat Flow(s),veh/h/ln	970	1870	1610	1739	0	1769	1253	0	1459	1147	0	1742
Q Serve(g_s), s	0.5	7.4	1.0	1.4	0.0	5.6	0.9	0.0	5.9	2.1	0.0	2.9
Cycle Q Clear(g_c), s	0.5	7.4	1.0	1.4	0.0	5.6	3.8	0.0	5.9	8.0	0.0	2.9
Prop In Lane	1.00		1.00	1.00		0.18	1.00		0.72	1.00		0.50
Lane Grp Cap(c), veh/h	527	741	638	502	0	932	340	0	314	256	0	375
V/C Ratio(X)	0.03	0.50	0.08	0.18	0.00	0.36	0.08	0.00	0.60	0.20	0.00	0.32
Avail Cap(c_a), veh/h	1007	1666	1434	688	0	1996	814	0	867	690	0	1035
HCM Platoon Ratio	1.00	1.00	1.00	1.00	1.00	1.00	1.00	1.00	1.00	1.00	1.00	1.00
Upstream Filter(I)	1.00	1.00	1.00	1.00	0.00	1.00	1.00	0.00	1.00	1.00	0.00	1.00
Uniform Delay (d), s/veh	9.4	11.5	9.5	7.5	0.0	7.0	18.3	0.0	17.9	21.4	0.0	16.7
Incr Delay (d2), s/veh	0.0	0.9	0.1	0.1	0.0	0.4	0.1	0.0	1.8	0.4	0.0	0.5
Initial Q Delay(d3),s/veh	0.0	0.0	0.0	0.0	0.0	0.0	0.0	0.0	0.0	0.0	0.0	0.0
%ile BackOfQ(50%),veh/ln	0.0	0.2	0.0	0.0	0.0	0.1	0.0	0.0	0.2	0.1	0.0	0.1
Unsig. Movement Delay, s/veh												
LnGrp Delay(d),s/veh	9.4	12.3	9.6	7.5	0.0	7.4	18.4	0.0	19.7	21.8	0.0	17.2
LnGrp LOS	A	B	A	A	A	A	B	A	B	C	A	B
Approach Vol, veh/h		434			428			216			169	
Approach Delay, s/veh		11.9			7.4			19.5			18.5	
Approach LOS		B			A			B			B	

Timer - Assigned Phs	1	2		4		6		8
Phs Duration (G+Y+Rc), s	6.6	27.0		16.9		33.6		16.9
Change Period (Y+Rc), s	3.0	* 7		* 6		* 7		* 6
Max Green Setting (Gmax), s	9.0	* 45		* 30		* 57		* 30
Max Q Clear Time (g_c+I1), s	3.4	9.4		10.0		7.6		7.9
Green Ext Time (p_c), s	0.1	5.6		1.0		4.8		1.4

Intersection Summary	
HCM 6th Ctrl Delay	12.6
HCM 6th LOS	B

Notes

* HCM 6th computational engine requires equal clearance times for the phases crossing the barrier.

Lane Group	EBL	EBR	NBL	NBT	SBT	SBR
Lane Configurations						
Traffic Volume (vph)	138	48	26	59	96	93
Future Volume (vph)	138	48	26	59	96	93
Ideal Flow (vphpl)	1900	1900	1900	1900	1900	1900
Storage Length (m)	0.0	20.0	0.0			0.0
Storage Lanes	1	1	0			0
Taper Length (m)	7.5		7.5			
Lane Util. Factor	1.00	1.00	1.00	1.00	1.00	1.00
Frt		0.850			0.933	
Flt Protected	0.950			0.985		
Satd. Flow (prot)	1805	1615	0	1705	1746	0
Flt Permitted	0.950			0.985		
Satd. Flow (perm)	1805	1615	0	1705	1746	0
Link Speed (k/h)	80			60	80	
Link Distance (m)	310.5			265.1	256.5	
Travel Time (s)	14.0			15.9	11.5	
Peak Hour Factor	0.92	0.92	0.92	0.92	0.92	0.92
Heavy Vehicles (%)	0%	0%	0%	14%	2%	1%
Adj. Flow (vph)	150	52	28	64	104	101
Shared Lane Traffic (%)						
Lane Group Flow (vph)	150	52	0	92	205	0
Sign Control	Stop			Free	Free	

Intersection Summary		
Area Type:	Other	
Control Type: Unsignalized		
Intersection Capacity Utilization 32.9%		ICU Level of Service A
Analysis Period (min) 15		

Intersection	
Int Delay, s/veh	4.8

Movement	EBL	EBR	NBL	NBT	SBT	SBR
Lane Configurations						
Traffic Vol, veh/h	138	48	26	59	96	93
Future Vol, veh/h	138	48	26	59	96	93
Conflicting Peds, #/hr	0	0	0	0	0	0
Sign Control	Stop	Stop	Free	Free	Free	Free
RT Channelized	-	None	-	None	-	Yield
Storage Length	0	20	-	-	-	-
Veh in Median Storage, #	0	-	-	0	0	-
Grade, %	0	-	-	0	0	-
Peak Hour Factor	92	92	92	92	92	92
Heavy Vehicles, %	0	0	0	14	2	1
Mvmt Flow	150	52	28	64	104	101

Major/Minor	Minor2		Major1		Major2	
Conflicting Flow All	275	155	104	0	-	0
Stage 1	155	-	-	-	-	-
Stage 2	120	-	-	-	-	-
Critical Hdwy	6.4	6.2	4.1	-	-	-
Critical Hdwy Stg 1	5.4	-	-	-	-	-
Critical Hdwy Stg 2	5.4	-	-	-	-	-
Follow-up Hdwy	3.5	3.3	2.2	-	-	-
Pot Cap-1 Maneuver	719	896	1500	-	-	-
Stage 1	878	-	-	-	-	-
Stage 2	910	-	-	-	-	-
Platoon blocked, %				-	-	-
Mov Cap-1 Maneuver	705	896	1500	-	-	-
Mov Cap-2 Maneuver	705	-	-	-	-	-
Stage 1	861	-	-	-	-	-
Stage 2	910	-	-	-	-	-

Approach	EB	NB	SB
HCM Control Delay, s	10.9	2.3	0
HCM LOS	B		

Minor Lane/Major Mvmt	NBL	NBT	EBLn1	EBLn2	SBT	SBR
Capacity (veh/h)	1500	-	705	896	-	-
HCM Lane V/C Ratio	0.019	-	0.213	0.058	-	-
HCM Control Delay (s)	7.4	0	11.5	9.3	-	-
HCM Lane LOS	A	A	B	A	-	-
HCM 95th %tile Q(veh)	0.1	-	0.8	0.2	-	-

Appendix F

2028 Total Traffic Operations Reports

Lane Group	EBL	EBT	EBR	WBL	WBT	WBR	NBL	NBT	NBR	SBL	SBT	SBR
Lane Configurations												
Traffic Volume (vph)	41	159	23	189	284	58	29	69	74	44	55	16
Future Volume (vph)	41	159	23	189	284	58	29	69	74	44	55	16
Ideal Flow (vphpl)	1900	1900	1900	1900	1900	1900	1900	1900	1900	1900	1900	1900
Storage Length (m)	70.0		70.0	120.0		0.0	55.0		0.0	55.0		0.0
Storage Lanes	1		1	1		0	1		0	1		0
Taper Length (m)	100.0			100.0			100.0			100.0		
Lane Util. Factor	1.00	1.00	1.00	1.00	1.00	1.00	1.00	1.00	1.00	1.00	1.00	1.00
Frt			0.850		0.975			0.923			0.967	
Flt Protected	0.950			0.950			0.950			0.950		
Satd. Flow (prot)	1805	1810	1468	1787	1720	0	1641	1679	0	1492	1570	0
Flt Permitted	0.540			0.563			0.707			0.659		
Satd. Flow (perm)	1026	1810	1468	1059	1720	0	1221	1679	0	1035	1570	0
Right Turn on Red			Yes			Yes			Yes			Yes
Satd. Flow (RTOR)			65		17			55			15	
Link Speed (k/h)		50			50			80			50	
Link Distance (m)		405.7			474.4			304.1			233.9	
Travel Time (s)		29.2			34.2			13.7			16.8	
Peak Hour Factor	0.92	0.92	0.92	0.92	0.92	0.92	0.92	0.92	0.92	0.92	0.92	0.92
Heavy Vehicles (%)	0%	5%	10%	1%	4%	26%	10%	7%	2%	21%	19%	10%
Adj. Flow (vph)	45	173	25	205	309	63	32	75	80	48	60	17
Shared Lane Traffic (%)												
Lane Group Flow (vph)	45	173	25	205	372	0	32	155	0	48	77	0
Turn Type	Perm	NA	Perm	pm+pt	NA		Perm	NA		Perm	NA	
Protected Phases		2		1	6			8			4	
Permitted Phases	2		2	6			8			4		
Detector Phase	2	2	2	1	6		8	8		4	4	
Switch Phase												
Minimum Initial (s)	20.0	20.0	20.0	5.0	20.0		10.0	10.0		10.0	10.0	
Minimum Split (s)	36.0	36.0	36.0	8.0	36.0		29.0	29.0		29.0	29.0	
Total Split (s)	52.0	52.0	52.0	12.0	64.0		36.0	36.0		36.0	36.0	
Total Split (%)	52.0%	52.0%	52.0%	12.0%	64.0%		36.0%	36.0%		36.0%	36.0%	
Maximum Green (s)	45.0	45.0	45.0	9.0	57.0		30.0	30.0		30.0	30.0	
Yellow Time (s)	5.4	5.4	5.4	3.0	5.4		4.1	4.1		4.1	4.1	
All-Red Time (s)	1.6	1.6	1.6	0.0	1.6		1.9	1.9		1.9	1.9	
Lost Time Adjust (s)	0.0	0.0	0.0	0.0	0.0		0.0	0.0		0.0	0.0	
Total Lost Time (s)	7.0	7.0	7.0	3.0	7.0		6.0	6.0		6.0	6.0	
Lead/Lag	Lag	Lag	Lag	Lead								
Lead-Lag Optimize?	Yes	Yes	Yes	Yes								
Vehicle Extension (s)	4.5	4.5	4.5	2.0	4.5		3.0	3.0		3.0	3.0	
Recall Mode	Min	Min	Min	None	Min		None	None		None	None	
Walk Time (s)	17.0	17.0	17.0		17.0		12.0	12.0		12.0	12.0	
Flash Dont Walk (s)	12.0	12.0	12.0		12.0		7.0	7.0		7.0	7.0	
Pedestrian Calls (#/hr)	0	0	0		0		0	0		0	0	
Act Effct Green (s)	20.0	20.0	20.0	34.1	30.1		10.4	10.4		10.4	10.4	
Actuated g/C Ratio	0.37	0.37	0.37	0.64	0.56		0.19	0.19		0.19	0.19	
v/c Ratio	0.12	0.26	0.04	0.27	0.38		0.14	0.42		0.24	0.24	
Control Delay	12.8	13.4	1.0	5.0	7.7		19.9	17.0		22.1	18.0	
Queue Delay	0.0	0.0	0.0	0.0	0.0		0.0	0.0		0.0	0.0	

Lane Group	EBL	EBT	EBR	WBL	WBT	WBR	NBL	NBT	NBR	SBL	SBT	SBR
Total Delay	12.8	13.4	1.0	5.0	7.7		19.9	17.0		22.1	18.0	
LOS	B	B	A	A	A		B	B		C	B	
Approach Delay		12.0			6.7			17.5			19.6	
Approach LOS		B			A			B			B	
Queue Length 50th (m)	2.8	11.4	0.0	6.7	16.9		2.7	8.7		4.1	5.3	
Queue Length 95th (m)	9.4	25.9	1.1	14.7	33.8		8.9	23.3		12.3	15.2	
Internal Link Dist (m)		381.7			450.4			280.1			209.9	
Turn Bay Length (m)	70.0		70.0	120.0			55.0			55.0		
Base Capacity (vph)	863	1523	1246	797	1720		685	966		580	887	
Starvation Cap Reductn	0	0	0	0	0		0	0		0	0	
Spillback Cap Reductn	0	0	0	0	0		0	0		0	0	
Storage Cap Reductn	0	0	0	0	0		0	0		0	0	
Reduced v/c Ratio	0.05	0.11	0.02	0.26	0.22		0.05	0.16		0.08	0.09	

Intersection Summary		
Area Type:	Other	
Cycle Length: 100		
Actuated Cycle Length: 53.5		
Natural Cycle: 75		
Control Type: Semi Act-Uncoord		
Maximum v/c Ratio: 0.42		
Intersection Signal Delay: 11.1		Intersection LOS: B
Intersection Capacity Utilization 73.5%		ICU Level of Service D
Analysis Period (min) 15		

Splits and Phases: 2: 28th Avenue & 16th Street

Movement	EBL	EBT	EBR	WBL	WBT	WBR	NBL	NBT	NBR	SBL	SBT	SBR
Lane Configurations												
Traffic Volume (veh/h)	41	159	23	189	284	58	29	69	74	44	55	16
Future Volume (veh/h)	41	159	23	189	284	58	29	69	74	44	55	16
Initial Q (Qb), veh	0	0	0	0	0	0	0	0	0	0	0	0
Ped-Bike Adj(A_pbT)	1.00		1.00	1.00		1.00	1.00		1.00	1.00		1.00
Parking Bus, Adj	1.00	1.00	1.00	1.00	1.00	1.00	1.00	1.00	1.00	1.00	1.00	1.00
Work Zone On Approach		No			No			No			No	
Adj Sat Flow, veh/h/ln	1900	1826	1752	1885	1841	1515	1752	1796	1870	1589	1618	1752
Adj Flow Rate, veh/h	45	173	25	205	309	63	32	75	80	48	60	17
Peak Hour Factor	0.92	0.92	0.92	0.92	0.92	0.92	0.92	0.92	0.92	0.92	0.92	0.92
Percent Heavy Veh, %	0	5	10	1	4	26	10	7	2	21	19	10
Cap, veh/h	545	718	584	711	816	166	330	154	165	257	236	67
Arrive On Green	0.39	0.39	0.39	0.10	0.55	0.55	0.19	0.19	0.19	0.19	0.19	0.19
Sat Flow, veh/h	1026	1826	1485	1795	1484	303	1238	795	848	1046	1213	344
Grp Volume(v), veh/h	45	173	25	205	0	372	32	0	155	48	0	77
Grp Sat Flow(s),veh/h/ln	1026	1826	1485	1795	0	1786	1238	0	1644	1046	0	1557
Q Serve(g_s), s	1.4	3.2	0.5	3.1	0.0	6.0	1.1	0.0	4.3	2.2	0.0	2.1
Cycle Q Clear(g_c), s	1.4	3.2	0.5	3.1	0.0	6.0	3.3	0.0	4.3	6.4	0.0	2.1
Prop In Lane	1.00		1.00	1.00		0.17	1.00		0.52	1.00		0.22
Lane Grp Cap(c), veh/h	545	718	584	711	0	983	330	0	319	257	0	302
V/C Ratio(X)	0.08	0.24	0.04	0.29	0.00	0.38	0.10	0.00	0.49	0.19	0.00	0.25
Avail Cap(c_a), veh/h	1050	1616	1314	853	0	2002	820	0	970	671	0	918
HCM Platoon Ratio	1.00	1.00	1.00	1.00	1.00	1.00	1.00	1.00	1.00	1.00	1.00	1.00
Upstream Filter(I)	1.00	1.00	1.00	1.00	0.00	1.00	1.00	0.00	1.00	1.00	0.00	1.00
Uniform Delay (d), s/veh	9.8	10.3	9.5	6.7	0.0	6.5	18.8	0.0	18.2	21.1	0.0	17.4
Incr Delay (d2), s/veh	0.1	0.3	0.1	0.1	0.0	0.4	0.1	0.0	1.1	0.3	0.0	0.4
Initial Q Delay(d3),s/veh	0.0	0.0	0.0	0.0	0.0	0.0	0.0	0.0	0.0	0.0	0.0	0.0
%ile BackOfQ(50%),veh/ln	0.0	0.1	0.0	0.0	0.0	0.1	0.0	0.0	0.1	0.1	0.0	0.1
Unsig. Movement Delay, s/veh												
LnGrp Delay(d),s/veh	9.9	10.6	9.6	6.7	0.0	6.9	18.9	0.0	19.4	21.4	0.0	17.8
LnGrp LOS	A	B	A	A	A	A	B	A	B	C	A	B
Approach Vol, veh/h		243			577			187			125	
Approach Delay, s/veh		10.4			6.9			19.3			19.2	
Approach LOS		B			A			B			B	

Timer - Assigned Phs	1	2		4		6		8
Phs Duration (G+Y+Rc), s	8.0	27.0		15.9		35.0		15.9
Change Period (Y+Rc), s	3.0	* 7		* 6		* 7		* 6
Max Green Setting (Gmax), s	9.0	* 45		* 30		* 57		* 30
Max Q Clear Time (g_c+I1), s	5.1	5.2		8.4		8.0		6.3
Green Ext Time (p_c), s	0.2	2.9		0.7		5.4		1.2

Intersection Summary		
HCM 6th Ctrl Delay		11.0
HCM 6th LOS		B

Notes

* HCM 6th computational engine requires equal clearance times for the phases crossing the barrier.

Lane Group	EBL	EBR	NBL	NBT	SBT	SBR
Lane Configurations						
Traffic Volume (vph)	46	108	178	127	193	76
Future Volume (vph)	46	108	178	127	193	76
Ideal Flow (vphpl)	1900	1900	1900	1900	1900	1900
Storage Length (m)	0.0	0.0	40.0			15.0
Storage Lanes	1	1	1			1
Taper Length (m)	7.5		7.5			
Lane Util. Factor	1.00	1.00	1.00	1.00	1.00	1.00
Frt		0.850				0.850
Flt Protected	0.950		0.950			
Satd. Flow (prot)	1770	1583	1770	1863	1863	1583
Flt Permitted	0.950		0.950			
Satd. Flow (perm)	1770	1583	1770	1863	1863	1583
Link Speed (k/h)	50			80	80	
Link Distance (m)	127.6			298.9	304.1	
Travel Time (s)	9.2			13.5	13.7	
Peak Hour Factor	0.92	0.92	0.92	0.92	0.92	0.92
Adj. Flow (vph)	50	117	193	138	210	83
Shared Lane Traffic (%)						
Lane Group Flow (vph)	50	117	193	138	210	83
Sign Control	Stop			Free	Free	

Intersection Summary		
Area Type:	Other	
Control Type: Unsignalized		
Intersection Capacity Utilization 33.4%		ICU Level of Service A
Analysis Period (min) 15		

Intersection	
Int Delay, s/veh	4.7

Movement	EBL	EBR	NBL	NBT	SBT	SBR
Lane Configurations						
Traffic Vol, veh/h	46	108	178	127	193	76
Future Vol, veh/h	46	108	178	127	193	76
Conflicting Peds, #/hr	0	0	0	0	0	0
Sign Control	Stop	Stop	Free	Free	Free	Free
RT Channelized	-	None	-	None	-	None
Storage Length	0	0	40	-	-	15
Veh in Median Storage, #	0	-	-	0	0	-
Grade, %	0	-	-	0	0	-
Peak Hour Factor	92	92	92	92	92	92
Heavy Vehicles, %	2	2	2	2	2	2
Mvmt Flow	50	117	193	138	210	83

Major/Minor	Minor2		Major1		Major2	
Conflicting Flow All	734	210	293	0	-	0
Stage 1	210	-	-	-	-	-
Stage 2	524	-	-	-	-	-
Critical Hdwy	6.42	6.22	4.12	-	-	-
Critical Hdwy Stg 1	5.42	-	-	-	-	-
Critical Hdwy Stg 2	5.42	-	-	-	-	-
Follow-up Hdwy	3.518	3.318	2.218	-	-	-
Pot Cap-1 Maneuver	387	830	1269	-	-	-
Stage 1	825	-	-	-	-	-
Stage 2	594	-	-	-	-	-
Platoon blocked, %				-	-	-
Mov Cap-1 Maneuver	328	830	1269	-	-	-
Mov Cap-2 Maneuver	328	-	-	-	-	-
Stage 1	700	-	-	-	-	-
Stage 2	594	-	-	-	-	-

Approach	EB	NB	SB
HCM Control Delay, s	12.4	4.9	0
HCM LOS	B		

Minor Lane/Major Mvmt	NBL	NBT	EBLn1	EBLn2	SBT	SBR
Capacity (veh/h)	1269	-	328	830	-	-
HCM Lane V/C Ratio	0.152	-	0.152	0.141	-	-
HCM Control Delay (s)	8.3	-	17.9	10.1	-	-
HCM Lane LOS	A	-	C	B	-	-
HCM 95th %tile Q(veh)	0.5	-	0.5	0.5	-	-

Lane Group	EBL	EBR	NBL	NBT	SBT	SBR
Lane Configurations						
Traffic Volume (vph)	187	18	81	118	67	234
Future Volume (vph)	187	18	81	118	67	234
Ideal Flow (vphpl)	1900	1900	1900	1900	1900	1900
Storage Length (m)	0.0	20.0	0.0			0.0
Storage Lanes	1	1	0			0
Taper Length (m)	7.5		7.5			
Lane Util. Factor	1.00	1.00	1.00	1.00	1.00	1.00
Frt		0.850			0.895	
Flt Protected	0.950			0.980		
Satd. Flow (prot)	1805	1615	0	1744	1651	0
Flt Permitted	0.950			0.980		
Satd. Flow (perm)	1805	1615	0	1744	1651	0
Link Speed (k/h)	80			60	80	
Link Distance (m)	310.5			265.1	256.5	
Travel Time (s)	14.0			15.9	11.5	
Peak Hour Factor	0.92	0.92	0.92	0.92	0.92	0.92
Heavy Vehicles (%)	0%	0%	5%	8%	10%	1%
Adj. Flow (vph)	203	20	88	128	73	254
Shared Lane Traffic (%)						
Lane Group Flow (vph)	203	20	0	216	327	0
Sign Control	Stop			Free	Free	

Intersection Summary			
Area Type:	Other		
Control Type: Unsignalized			
Intersection Capacity Utilization 49.0%			ICU Level of Service A
Analysis Period (min) 15			

Intersection	
Int Delay, s/veh	5.6

Movement	EBL	EBR	NBL	NBT	SBT	SBR
Lane Configurations						
Traffic Vol, veh/h	187	18	81	118	67	234
Future Vol, veh/h	187	18	81	118	67	234
Conflicting Peds, #/hr	0	0	0	0	0	0
Sign Control	Stop	Stop	Free	Free	Free	Free
RT Channelized	-	None	-	None	-	Yield
Storage Length	0	20	-	-	-	-
Veh in Median Storage, #	0	-	-	0	0	-
Grade, %	0	-	-	0	0	-
Peak Hour Factor	92	92	92	92	92	92
Heavy Vehicles, %	0	0	5	8	10	1
Mvmt Flow	203	20	88	128	73	254

Major/Minor	Minor2		Major1		Major2	
Conflicting Flow All	504	200	73	0	-	0
Stage 1	200	-	-	-	-	-
Stage 2	304	-	-	-	-	-
Critical Hdwy	6.4	6.2	4.15	-	-	-
Critical Hdwy Stg 1	5.4	-	-	-	-	-
Critical Hdwy Stg 2	5.4	-	-	-	-	-
Follow-up Hdwy	3.5	3.3	2.245	-	-	-
Pot Cap-1 Maneuver	531	846	1508	-	-	-
Stage 1	838	-	-	-	-	-
Stage 2	753	-	-	-	-	-
Platoon blocked, %				-	-	-
Mov Cap-1 Maneuver	498	846	1508	-	-	-
Mov Cap-2 Maneuver	498	-	-	-	-	-
Stage 1	785	-	-	-	-	-
Stage 2	753	-	-	-	-	-

Approach	EB	NB	SB
HCM Control Delay, s	16.4	3.1	0
HCM LOS	C		

Minor Lane/Major Mvmt	NBL	NBT	EBLn1	EBLn2	SBT	SBR
Capacity (veh/h)	1508	-	498	846	-	-
HCM Lane V/C Ratio	0.058	-	0.408	0.023	-	-
HCM Control Delay (s)	7.5	0	17.1	9.4	-	-
HCM Lane LOS	A	A	C	A	-	-
HCM 95th %tile Q(veh)	0.2	-	2	0.1	-	-

Lane Group	EBT	EBR	WBL	WBT	NBL	NBR
Lane Configurations						
Traffic Volume (vph)	0	0	165	0	0	54
Future Volume (vph)	0	0	165	0	0	54
Ideal Flow (vphpl)	1900	1900	1900	1900	1900	1900
Lane Util. Factor	1.00	1.00	1.00	1.00	1.00	1.00
Frt					0.865	
Flt Protected				0.950		
Satd. Flow (prot)	1863	0	0	1770	1611	0
Flt Permitted				0.950		
Satd. Flow (perm)	1863	0	0	1770	1611	0
Link Speed (k/h)	50			50	50	
Link Distance (m)	150.6			119.9	110.4	
Travel Time (s)	10.8			8.6	7.9	
Peak Hour Factor	0.92	0.92	0.92	0.92	0.92	0.92
Adj. Flow (vph)	0	0	179	0	0	59
Shared Lane Traffic (%)						
Lane Group Flow (vph)	0	0	0	179	59	0
Sign Control	Free			Free	Stop	

Intersection Summary		
Area Type:	Other	
Control Type: Unsignalized		
Intersection Capacity Utilization 19.2%		ICU Level of Service A
Analysis Period (min) 15		

Intersection	
Int Delay, s/veh	7.7

Movement	EBT	EBR	WBL	WBT	NBL	NBR
Lane Configurations						
Traffic Vol, veh/h	0	0	165	0	0	54
Future Vol, veh/h	0	0	165	0	0	54
Conflicting Peds, #/hr	0	0	0	0	0	0
Sign Control	Free	Free	Free	Free	Stop	Stop
RT Channelized	-	None	-	None	-	None
Storage Length	-	-	-	-	0	-
Veh in Median Storage, #	0	-	-	0	0	-
Grade, %	0	-	-	0	0	-
Peak Hour Factor	92	92	92	92	92	92
Heavy Vehicles, %	2	2	2	2	2	2
Mvmt Flow	0	0	179	0	0	59

Major/Minor	Major1		Major2		Minor1	
Conflicting Flow All	0	0	1	0	359	1
Stage 1	-	-	-	-	1	-
Stage 2	-	-	-	-	358	-
Critical Hdwy	-	-	4.12	-	6.42	6.22
Critical Hdwy Stg 1	-	-	-	-	5.42	-
Critical Hdwy Stg 2	-	-	-	-	5.42	-
Follow-up Hdwy	-	-	2.218	-	3.518	3.318
Pot Cap-1 Maneuver	-	-	1622	-	640	1084
Stage 1	-	-	-	-	1022	-
Stage 2	-	-	-	-	707	-
Platoon blocked, %	-	-		-		
Mov Cap-1 Maneuver	-	-	1622	-	570	1084
Mov Cap-2 Maneuver	-	-	-	-	570	-
Stage 1	-	-	-	-	1022	-
Stage 2	-	-	-	-	629	-

Approach	EB	WB	NB
HCM Control Delay, s	0	7.5	8.5
HCM LOS			A

Minor Lane/Major Mvmt	NBLn1	EBT	EBR	WBL	WBT
Capacity (veh/h)	1084	-	-	1622	-
HCM Lane V/C Ratio	0.054	-	-	0.111	-
HCM Control Delay (s)	8.5	-	-	7.5	0
HCM Lane LOS	A	-	-	A	A
HCM 95th %tile Q(veh)	0.2	-	-	0.4	-

Lane Group	EBT	EBR	WBL	WBT	NBL	NBR
Lane Configurations						
Traffic Volume (vph)	54	0	89	165	0	100
Future Volume (vph)	54	0	89	165	0	100
Ideal Flow (vphpl)	1900	1900	1900	1900	1900	1900
Lane Util. Factor	1.00	1.00	1.00	1.00	1.00	1.00
Frt					0.865	
Flt Protected				0.983		
Satd. Flow (prot)	1863	0	0	1831	1611	0
Flt Permitted				0.983		
Satd. Flow (perm)	1863	0	0	1831	1611	0
Link Speed (k/h)	50			50	50	
Link Distance (m)	119.9			127.6	107.7	
Travel Time (s)	8.6			9.2	7.8	
Peak Hour Factor	0.92	0.92	0.92	0.92	0.92	0.92
Adj. Flow (vph)	59	0	97	179	0	109
Shared Lane Traffic (%)						
Lane Group Flow (vph)	59	0	0	276	109	0
Sign Control	Free			Free	Stop	

Intersection Summary		
Area Type:	Other	
Control Type: Unsignalized		
Intersection Capacity Utilization 33.1%		ICU Level of Service A
Analysis Period (min) 15		

Intersection	
Int Delay, s/veh	3.8

Movement	EBT	EBR	WBL	WBT	NBL	NBR
Lane Configurations						
Traffic Vol, veh/h	54	0	89	165	0	100
Future Vol, veh/h	54	0	89	165	0	100
Conflicting Peds, #/hr	0	0	0	0	0	0
Sign Control	Free	Free	Free	Free	Stop	Stop
RT Channelized	-	None	-	None	-	None
Storage Length	-	-	-	-	0	-
Veh in Median Storage, #	0	-	-	0	0	-
Grade, %	0	-	-	0	0	-
Peak Hour Factor	92	92	92	92	92	92
Heavy Vehicles, %	2	2	2	2	2	2
Mvmt Flow	59	0	97	179	0	109

Major/Minor	Major1		Major2		Minor1	
Conflicting Flow All	0	0	59	0	432	59
Stage 1	-	-	-	-	59	-
Stage 2	-	-	-	-	373	-
Critical Hdwy	-	-	4.12	-	6.42	6.22
Critical Hdwy Stg 1	-	-	-	-	5.42	-
Critical Hdwy Stg 2	-	-	-	-	5.42	-
Follow-up Hdwy	-	-	2.218	-	3.518	3.318
Pot Cap-1 Maneuver	-	-	1545	-	581	1007
Stage 1	-	-	-	-	964	-
Stage 2	-	-	-	-	696	-
Platoon blocked, %	-	-		-		
Mov Cap-1 Maneuver	-	-	1545	-	540	1007
Mov Cap-2 Maneuver	-	-	-	-	540	-
Stage 1	-	-	-	-	964	-
Stage 2	-	-	-	-	647	-

Approach	EB	WB	NB
HCM Control Delay, s	0	2.6	9
HCM LOS			A

Minor Lane/Major Mvmt	NBLn1	EBT	EBR	WBL	WBT
Capacity (veh/h)	1007	-	-	1545	-
HCM Lane V/C Ratio	0.108	-	-	0.063	-
HCM Control Delay (s)	9	-	-	7.5	0
HCM Lane LOS	A	-	-	A	A
HCM 95th %tile Q(veh)	0.4	-	-	0.2	-

Lane Group	EBL	EBT	EBR	WBL	WBT	WBR	NBL	NBT	NBR	SBL	SBT	SBR
Lane Configurations												
Traffic Volume (vph)	16	338	54	100	254	55	38	87	150	46	77	55
Future Volume (vph)	16	338	54	100	254	55	38	87	150	46	77	55
Ideal Flow (vphpl)	1900	1900	1900	1900	1900	1900	1900	1900	1900	1900	1900	1900
Storage Length (m)	70.0		70.0	120.0		0.0	55.0		0.0	55.0		0.0
Storage Lanes	1		1	1		0	1		0	1		0
Taper Length (m)	100.0			100.0			100.0			100.0		
Lane Util. Factor	1.00	1.00	1.00	1.00	1.00	1.00	1.00	1.00	1.00	1.00	1.00	1.00
Frt			0.850		0.973			0.905			0.937	
Flt Protected	0.950			0.950			0.950			0.950		
Satd. Flow (prot)	1626	1863	1615	1719	1686	0	1736	1618	0	1687	1689	0
Flt Permitted	0.558			0.442			0.665			0.544		
Satd. Flow (perm)	955	1863	1615	800	1686	0	1215	1618	0	966	1689	0
Right Turn on Red			Yes			Yes			Yes			Yes
Satd. Flow (RTOR)			65		18			88			37	
Link Speed (k/h)		50			50			80			50	
Link Distance (m)		405.7			474.4			304.1			233.9	
Travel Time (s)		29.2			34.2			13.7			16.8	
Peak Hour Factor	0.92	0.92	0.92	0.92	0.92	0.92	0.92	0.92	0.92	0.92	0.92	0.92
Heavy Vehicles (%)	11%	2%	0%	5%	5%	31%	4%	17%	0%	7%	0%	13%
Adj. Flow (vph)	17	367	59	109	276	60	41	95	163	50	84	60
Shared Lane Traffic (%)												
Lane Group Flow (vph)	17	367	59	109	336	0	41	258	0	50	144	0
Turn Type	Perm	NA	Perm	pm+pt	NA		Perm	NA		Perm	NA	
Protected Phases		2		1	6			8			4	
Permitted Phases	2		2	6			8			4		
Detector Phase	2	2	2	1	6		8	8		4	4	
Switch Phase												
Minimum Initial (s)	20.0	20.0	20.0	5.0	20.0		10.0	10.0		10.0	10.0	
Minimum Split (s)	36.0	36.0	36.0	8.0	36.0		29.0	29.0		29.0	29.0	
Total Split (s)	52.0	52.0	52.0	12.0	64.0		36.0	36.0		36.0	36.0	
Total Split (%)	52.0%	52.0%	52.0%	12.0%	64.0%		36.0%	36.0%		36.0%	36.0%	
Maximum Green (s)	45.0	45.0	45.0	9.0	57.0		30.0	30.0		30.0	30.0	
Yellow Time (s)	5.4	5.4	5.4	3.0	5.4		4.1	4.1		4.1	4.1	
All-Red Time (s)	1.6	1.6	1.6	0.0	1.6		1.9	1.9		1.9	1.9	
Lost Time Adjust (s)	0.0	0.0	0.0	0.0	0.0		0.0	0.0		0.0	0.0	
Total Lost Time (s)	7.0	7.0	7.0	3.0	7.0		6.0	6.0		6.0	6.0	
Lead/Lag	Lag	Lag	Lag	Lead								
Lead-Lag Optimize?	Yes	Yes	Yes	Yes								
Vehicle Extension (s)	4.5	4.5	4.5	2.0	4.5		3.0	3.0		3.0	3.0	
Recall Mode	Min	Min	Min	None	Min		None	None		None	None	
Walk Time (s)	17.0	17.0	17.0		17.0		12.0	12.0		12.0	12.0	
Flash Dont Walk (s)	12.0	12.0	12.0		12.0		7.0	7.0		7.0	7.0	
Pedestrian Calls (#/hr)	0	0	0		0		0	0		0	0	
Act Effct Green (s)	22.0	22.0	22.0	33.5	29.4		12.8	12.8		12.8	12.8	
Actuated g/C Ratio	0.40	0.40	0.40	0.60	0.53		0.23	0.23		0.23	0.23	
v/c Ratio	0.04	0.50	0.09	0.19	0.37		0.15	0.59		0.23	0.35	
Control Delay	13.1	16.9	4.2	5.9	8.9		20.1	19.5		21.8	17.6	
Queue Delay	0.0	0.0	0.0	0.0	0.0		0.0	0.0		0.0	0.0	

Lane Group	EBL	EBT	EBR	WBL	WBT	WBR	NBL	NBT	NBR	SBL	SBT	SBR
Total Delay	13.1	16.9	4.2	5.9	8.9		20.1	19.5		21.8	17.6	
LOS	B	B	A	A	A		C	B		C	B	
Approach Delay		15.1			8.1			19.6			18.7	
Approach LOS		B			A			B			B	
Queue Length 50th (m)	1.1	27.8	0.0	3.7	16.0		3.4	15.2		4.2	9.2	
Queue Length 95th (m)	5.3	62.3	6.0	11.7	39.1		11.8	41.6		14.0	26.1	
Internal Link Dist (m)		381.7			450.4			280.1			209.9	
Turn Bay Length (m)	70.0		70.0	120.0			55.0			55.0		
Base Capacity (vph)	787	1535	1342	635	1611		675	938		536	955	
Starvation Cap Reductn	0	0	0	0	0		0	0		0	0	
Spillback Cap Reductn	0	0	0	0	0		0	0		0	0	
Storage Cap Reductn	0	0	0	0	0		0	0		0	0	
Reduced v/c Ratio	0.02	0.24	0.04	0.17	0.21		0.06	0.28		0.09	0.15	

Intersection Summary			
Area Type:	Other		
Cycle Length: 100			
Actuated Cycle Length: 55.5			
Natural Cycle: 75			
Control Type: Semi Act-Uncoord			
Maximum v/c Ratio: 0.59			
Intersection Signal Delay: 14.3		Intersection LOS: B	
Intersection Capacity Utilization 77.2%		ICU Level of Service D	
Analysis Period (min) 15			

Splits and Phases: 2: 28th Avenue & 16th Street

Movement	EBL	EBT	EBR	WBL	WBT	WBR	NBL	NBT	NBR	SBL	SBT	SBR
Lane Configurations												
Traffic Volume (veh/h)	16	338	54	100	254	55	38	87	150	46	77	55
Future Volume (veh/h)	16	338	54	100	254	55	38	87	150	46	77	55
Initial Q (Qb), veh	0	0	0	0	0	0	0	0	0	0	0	0
Ped-Bike Adj(A_pbT)	1.00		1.00	1.00		1.00	1.00		1.00	1.00		1.00
Parking Bus, Adj	1.00	1.00	1.00	1.00	1.00	1.00	1.00	1.00	1.00	1.00	1.00	1.00
Work Zone On Approach		No			No			No			No	
Adj Sat Flow, veh/h/ln	1737	1870	1900	1826	1826	1441	1841	1648	1900	1796	1900	1707
Adj Flow Rate, veh/h	17	367	59	109	276	60	41	95	163	50	84	60
Peak Hour Factor	0.92	0.92	0.92	0.92	0.92	0.92	0.92	0.92	0.92	0.92	0.92	0.92
Percent Heavy Veh, %	11	2	0	5	5	31	4	17	0	7	0	13
Cap, veh/h	493	694	597	467	728	158	368	140	241	242	266	190
Arrive On Green	0.37	0.37	0.37	0.07	0.50	0.50	0.26	0.26	0.26	0.26	0.26	0.26
Sat Flow, veh/h	970	1870	1610	1739	1453	316	1224	545	935	1077	1031	736
Grp Volume(v), veh/h	17	367	59	109	0	336	41	0	258	50	0	144
Grp Sat Flow(s),veh/h/ln	970	1870	1610	1739	0	1769	1224	0	1480	1077	0	1767
Q Serve(g_s), s	0.6	8.3	1.3	1.9	0.0	6.3	1.5	0.0	8.5	2.4	0.0	3.6
Cycle Q Clear(g_c), s	0.6	8.3	1.3	1.9	0.0	6.3	5.1	0.0	8.5	10.8	0.0	3.6
Prop In Lane	1.00		1.00	1.00		0.18	1.00		0.63	1.00		0.42
Lane Grp Cap(c), veh/h	493	694	597	467	0	887	368	0	381	242	0	455
V/C Ratio(X)	0.03	0.53	0.10	0.23	0.00	0.38	0.11	0.00	0.68	0.21	0.00	0.32
Avail Cap(c_a), veh/h	943	1561	1344	628	0	1870	734	0	823	564	0	983
HCM Platoon Ratio	1.00	1.00	1.00	1.00	1.00	1.00	1.00	1.00	1.00	1.00	1.00	1.00
Upstream Filter(I)	1.00	1.00	1.00	1.00	0.00	1.00	1.00	0.00	1.00	1.00	0.00	1.00
Uniform Delay (d), s/veh	10.9	13.3	11.1	8.8	0.0	8.3	18.2	0.0	18.0	22.9	0.0	16.2
Incr Delay (d2), s/veh	0.0	1.1	0.1	0.1	0.0	0.5	0.1	0.0	2.1	0.4	0.0	0.4
Initial Q Delay(d3),s/veh	0.0	0.0	0.0	0.0	0.0	0.0	0.0	0.0	0.0	0.0	0.0	0.0
%ile BackOfQ(50%),veh/ln	0.0	0.2	0.0	0.0	0.0	0.1	0.0	0.0	0.2	0.2	0.0	0.1
Unsig. Movement Delay, s/veh												
LnGrp Delay(d),s/veh	10.9	14.3	11.2	8.9	0.0	8.7	18.3	0.0	20.1	23.3	0.0	16.6
LnGrp LOS	B	B	B	A	A	A	B	A	C	C	A	B
Approach Vol, veh/h		443			445			299			194	
Approach Delay, s/veh		13.8			8.8			19.9			18.3	
Approach LOS		B			A			B			B	

Timer - Assigned Phs	1	2		4		6		8
Phs Duration (G+Y+Rc), s	7.0	27.0		19.9		34.0		19.9
Change Period (Y+Rc), s	3.0	* 7		* 6		* 7		* 6
Max Green Setting (Gmax), s	9.0	* 45		* 30		* 57		* 30
Max Q Clear Time (g_c+I1), s	3.9	10.3		12.8		8.3		10.5
Green Ext Time (p_c), s	0.1	5.7		1.1		4.8		2.0

Intersection Summary		
HCM 6th Ctrl Delay		14.1
HCM 6th LOS		B

Notes

* HCM 6th computational engine requires equal clearance times for the phases crossing the barrier.

Lane Group	EBL	EBR	NBL	NBT	SBT	SBR
Lane Configurations						
Traffic Volume (vph)	76	178	108	198	188	46
Future Volume (vph)	76	178	108	198	188	46
Ideal Flow (vphpl)	1900	1900	1900	1900	1900	1900
Storage Length (m)	0.0	0.0	40.0			15.0
Storage Lanes	1	1	1			1
Taper Length (m)	7.5		7.5			
Lane Util. Factor	1.00	1.00	1.00	1.00	1.00	1.00
Frt		0.850				0.850
Flt Protected	0.950		0.950			
Satd. Flow (prot)	1770	1583	1770	1863	1863	1583
Flt Permitted	0.950		0.950			
Satd. Flow (perm)	1770	1583	1770	1863	1863	1583
Link Speed (k/h)	50			80	80	
Link Distance (m)	127.6			298.9	304.1	
Travel Time (s)	9.2			13.5	13.7	
Peak Hour Factor	0.92	0.92	0.92	0.92	0.92	0.92
Adj. Flow (vph)	83	193	117	215	204	50
Shared Lane Traffic (%)						
Lane Group Flow (vph)	83	193	117	215	204	50
Sign Control	Stop			Free	Free	

Intersection Summary		
Area Type:	Other	
Control Type: Unsignalized		
Intersection Capacity Utilization 30.1%		ICU Level of Service A
Analysis Period (min) 15		

Intersection	
Int Delay, s/veh	5

Movement	EBL	EBR	NBL	NBT	SBT	SBR
Lane Configurations						
Traffic Vol, veh/h	76	178	108	198	188	46
Future Vol, veh/h	76	178	108	198	188	46
Conflicting Peds, #/hr	0	0	0	0	0	0
Sign Control	Stop	Stop	Free	Free	Free	Free
RT Channelized	-	None	-	None	-	None
Storage Length	0	0	40	-	-	15
Veh in Median Storage, #	0	-	-	0	0	-
Grade, %	0	-	-	0	0	-
Peak Hour Factor	92	92	92	92	92	92
Heavy Vehicles, %	2	2	2	2	2	2
Mvmt Flow	83	193	117	215	204	50

Major/Minor	Minor2		Major1		Major2	
Conflicting Flow All	653	204	254	0	-	0
Stage 1	204	-	-	-	-	-
Stage 2	449	-	-	-	-	-
Critical Hdwy	6.42	6.22	4.12	-	-	-
Critical Hdwy Stg 1	5.42	-	-	-	-	-
Critical Hdwy Stg 2	5.42	-	-	-	-	-
Follow-up Hdwy	3.518	3.318	2.218	-	-	-
Pot Cap-1 Maneuver	432	837	1311	-	-	-
Stage 1	830	-	-	-	-	-
Stage 2	643	-	-	-	-	-
Platoon blocked, %				-	-	-
Mov Cap-1 Maneuver	394	837	1311	-	-	-
Mov Cap-2 Maneuver	394	-	-	-	-	-
Stage 1	756	-	-	-	-	-
Stage 2	643	-	-	-	-	-

Approach	EB	NB	SB
HCM Control Delay, s	12.4	2.8	0
HCM LOS	B		

Minor Lane/Major Mvmt	NBL	NBT	EBLn1	EBLn2	SBT	SBR
Capacity (veh/h)	1311	-	394	837	-	-
HCM Lane V/C Ratio	0.09	-	0.21	0.231	-	-
HCM Control Delay (s)	8	-	16.5	10.6	-	-
HCM Lane LOS	A	-	C	B	-	-
HCM 95th %tile Q(veh)	0.3	-	0.8	0.9	-	-

Lane Group	EBL	EBR	NBL	NBT	SBT	SBR
Lane Configurations						
Traffic Volume (vph)	223	48	26	82	134	233
Future Volume (vph)	223	48	26	82	134	233
Ideal Flow (vphpl)	1900	1900	1900	1900	1900	1900
Storage Length (m)	0.0	20.0	0.0			0.0
Storage Lanes	1	1	0			0
Taper Length (m)	7.5		7.5			
Lane Util. Factor	1.00	1.00	1.00	1.00	1.00	1.00
Frt		0.850			0.914	
Flt Protected	0.950			0.988		
Satd. Flow (prot)	1805	1615	0	1697	1713	0
Flt Permitted	0.950			0.988		
Satd. Flow (perm)	1805	1615	0	1697	1713	0
Link Speed (k/h)	80			60	80	
Link Distance (m)	310.5			265.1	256.5	
Travel Time (s)	14.0			15.9	11.5	
Peak Hour Factor	0.92	0.92	0.92	0.92	0.92	0.92
Heavy Vehicles (%)	0%	0%	0%	14%	2%	1%
Adj. Flow (vph)	242	52	28	89	146	253
Shared Lane Traffic (%)						
Lane Group Flow (vph)	242	52	0	117	399	0
Sign Control	Stop			Free	Free	

Intersection Summary			
Area Type:	Other		
Control Type: Unsignalized			
Intersection Capacity Utilization 46.0%			ICU Level of Service A
Analysis Period (min) 15			

Intersection	
Int Delay, s/veh	5.5

Movement	EBL	EBR	NBL	NBT	SBT	SBR
Lane Configurations						
Traffic Vol, veh/h	223	48	26	82	134	233
Future Vol, veh/h	223	48	26	82	134	233
Conflicting Peds, #/hr	0	0	0	0	0	0
Sign Control	Stop	Stop	Free	Free	Free	Free
RT Channelized	-	None	-	None	-	Yield
Storage Length	0	20	-	-	-	-
Veh in Median Storage, #	0	-	-	0	0	-
Grade, %	0	-	-	0	0	-
Peak Hour Factor	92	92	92	92	92	92
Heavy Vehicles, %	0	0	0	14	2	1
Mvmt Flow	242	52	28	89	146	253

Major/Minor	Minor2		Major1		Major2	
Conflicting Flow All	418	273	146	0	-	0
Stage 1	273	-	-	-	-	-
Stage 2	145	-	-	-	-	-
Critical Hdwy	6.4	6.2	4.1	-	-	-
Critical Hdwy Stg 1	5.4	-	-	-	-	-
Critical Hdwy Stg 2	5.4	-	-	-	-	-
Follow-up Hdwy	3.5	3.3	2.2	-	-	-
Pot Cap-1 Maneuver	595	771	1448	-	-	-
Stage 1	778	-	-	-	-	-
Stage 2	887	-	-	-	-	-
Platoon blocked, %				-	-	-
Mov Cap-1 Maneuver	583	771	1448	-	-	-
Mov Cap-2 Maneuver	583	-	-	-	-	-
Stage 1	762	-	-	-	-	-
Stage 2	887	-	-	-	-	-

Approach	EB	NB	SB
HCM Control Delay, s	14.5	1.8	0
HCM LOS	B		

Minor Lane/Major Mvmt	NBL	NBT	EBLn1	EBLn2	SBT	SBR
Capacity (veh/h)	1448	-	583	771	-	-
HCM Lane V/C Ratio	0.02	-	0.416	0.068	-	-
HCM Control Delay (s)	7.5	0	15.5	10	-	-
HCM Lane LOS	A	A	C	B	-	-
HCM 95th %tile Q(veh)	0.1	-	2	0.2	-	-

Lane Group	EBT	EBR	WBL	WBT	NBL	NBR
Lane Configurations						
Traffic Volume (vph)	0	0	100	0	0	102
Future Volume (vph)	0	0	100	0	0	102
Ideal Flow (vphpl)	1900	1900	1900	1900	1900	1900
Lane Util. Factor	1.00	1.00	1.00	1.00	1.00	1.00
Frt					0.865	
Flt Protected				0.950		
Satd. Flow (prot)	1863	0	0	1770	1611	0
Flt Permitted				0.950		
Satd. Flow (perm)	1863	0	0	1770	1611	0
Link Speed (k/h)	50			50	50	
Link Distance (m)	150.6			119.9	110.4	
Travel Time (s)	10.8			8.6	7.9	
Peak Hour Factor	0.92	0.92	0.92	0.92	0.92	0.92
Adj. Flow (vph)	0	0	109	0	0	111
Shared Lane Traffic (%)						
Lane Group Flow (vph)	0	0	0	109	111	0
Sign Control	Free			Free	Stop	

Intersection Summary		
Area Type:	Other	
Control Type: Unsignalized		
Intersection Capacity Utilization 18.5%		ICU Level of Service A
Analysis Period (min) 15		

Intersection	
Int Delay, s/veh	8

Movement	EBT	EBR	WBL	WBT	NBL	NBR
Lane Configurations						
Traffic Vol, veh/h	0	0	100	0	0	102
Future Vol, veh/h	0	0	100	0	0	102
Conflicting Peds, #/hr	0	0	0	0	0	0
Sign Control	Free	Free	Free	Free	Stop	Stop
RT Channelized	-	None	-	None	-	None
Storage Length	-	-	-	-	0	-
Veh in Median Storage, #	0	-	-	0	0	-
Grade, %	0	-	-	0	0	-
Peak Hour Factor	92	92	92	92	92	92
Heavy Vehicles, %	2	2	2	2	2	2
Mvmt Flow	0	0	109	0	0	111

Major/Minor	Major1		Major2		Minor1	
Conflicting Flow All	0	0	1	0	219	1
Stage 1	-	-	-	-	1	-
Stage 2	-	-	-	-	218	-
Critical Hdwy	-	-	4.12	-	6.42	6.22
Critical Hdwy Stg 1	-	-	-	-	5.42	-
Critical Hdwy Stg 2	-	-	-	-	5.42	-
Follow-up Hdwy	-	-	2.218	-	3.518	3.318
Pot Cap-1 Maneuver	-	-	1622	-	769	1084
Stage 1	-	-	-	-	1022	-
Stage 2	-	-	-	-	818	-
Platoon blocked, %	-	-		-		
Mov Cap-1 Maneuver	-	-	1622	-	717	1084
Mov Cap-2 Maneuver	-	-	-	-	717	-
Stage 1	-	-	-	-	1022	-
Stage 2	-	-	-	-	763	-

Approach	EB	WB	NB
HCM Control Delay, s	0	7.4	8.7
HCM LOS			A

Minor Lane/Major Mvmt	NBLn1	EBT	EBR	WBL	WBT
Capacity (veh/h)	1084	-	-	1622	-
HCM Lane V/C Ratio	0.102	-	-	0.067	-
HCM Control Delay (s)	8.7	-	-	7.4	0
HCM Lane LOS	A	-	-	A	A
HCM 95th %tile Q(veh)	0.3	-	-	0.2	-

Lane Group	EBT	EBR	WBL	WBT	NBL	NBR
Lane Configurations						
Traffic Volume (vph)	102	0	54	100	0	152
Future Volume (vph)	102	0	54	100	0	152
Ideal Flow (vphpl)	1900	1900	1900	1900	1900	1900
Lane Util. Factor	1.00	1.00	1.00	1.00	1.00	1.00
Frt					0.865	
Flt Protected				0.983		
Satd. Flow (prot)	1863	0	0	1831	1611	0
Flt Permitted				0.983		
Satd. Flow (perm)	1863	0	0	1831	1611	0
Link Speed (k/h)	50			50	50	
Link Distance (m)	119.9			127.6	107.7	
Travel Time (s)	8.6			9.2	7.8	
Peak Hour Factor	0.92	0.92	0.92	0.92	0.92	0.92
Adj. Flow (vph)	111	0	59	109	0	165
Shared Lane Traffic (%)						
Lane Group Flow (vph)	111	0	0	168	165	0
Sign Control	Free			Free	Stop	

Intersection Summary		
Area Type:	Other	
Control Type: Unsignalized		
Intersection Capacity Utilization 31.0%		ICU Level of Service A
Analysis Period (min) 15		

Intersection	
Int Delay, s/veh	4.6

Movement	EBT	EBR	WBL	WBT	NBL	NBR
Lane Configurations						
Traffic Vol, veh/h	102	0	54	100	0	152
Future Vol, veh/h	102	0	54	100	0	152
Conflicting Peds, #/hr	0	0	0	0	0	0
Sign Control	Free	Free	Free	Free	Stop	Stop
RT Channelized	-	None	-	None	-	None
Storage Length	-	-	-	-	0	-
Veh in Median Storage, #	0	-	-	0	0	-
Grade, %	0	-	-	0	0	-
Peak Hour Factor	92	92	92	92	92	92
Heavy Vehicles, %	2	2	2	2	2	2
Mvmt Flow	111	0	59	109	0	165

Major/Minor	Major1		Major2		Minor1	
Conflicting Flow All	0	0	111	0	338	111
Stage 1	-	-	-	-	111	-
Stage 2	-	-	-	-	227	-
Critical Hdwy	-	-	4.12	-	6.42	6.22
Critical Hdwy Stg 1	-	-	-	-	5.42	-
Critical Hdwy Stg 2	-	-	-	-	5.42	-
Follow-up Hdwy	-	-	2.218	-	3.518	3.318
Pot Cap-1 Maneuver	-	-	1479	-	658	942
Stage 1	-	-	-	-	914	-
Stage 2	-	-	-	-	811	-
Platoon blocked, %	-	-		-		
Mov Cap-1 Maneuver	-	-	1479	-	630	942
Mov Cap-2 Maneuver	-	-	-	-	630	-
Stage 1	-	-	-	-	914	-
Stage 2	-	-	-	-	777	-

Approach	EB	WB	NB
HCM Control Delay, s	0	2.6	9.6
HCM LOS			A

Minor Lane/Major Mvmt	NBLn1	EBT	EBR	WBL	WBT
Capacity (veh/h)	942	-	-	1479	-
HCM Lane V/C Ratio	0.175	-	-	0.04	-
HCM Control Delay (s)	9.6	-	-	7.5	0
HCM Lane LOS	A	-	-	A	A
HCM 95th %tile Q(veh)	0.6	-	-	0.1	-

Appendix G

2033 Background Traffic Operations Reports

Lane Group	EBT	EBR	WBL	WBT	NBL	NBR
Lane Configurations						
Traffic Volume (vph)	231	11	0	386	0	12
Future Volume (vph)	231	11	0	386	0	12
Ideal Flow (vphpl)	1900	1900	1900	1900	1900	1900
Lane Util. Factor	1.00	1.00	1.00	1.00	1.00	1.00
Frt	0.994					0.865
Flt Protected						
Satd. Flow (prot)	1852	0	0	1863	0	1611
Flt Permitted						
Satd. Flow (perm)	1852	0	0	1863	0	1611
Link Speed (k/h)	50			50	50	
Link Distance (m)	197.3			405.7	303.8	
Travel Time (s)	14.2			29.2	21.9	
Peak Hour Factor	0.92	0.92	0.92	0.92	0.92	0.92
Adj. Flow (vph)	251	12	0	420	0	13
Shared Lane Traffic (%)						
Lane Group Flow (vph)	263	0	0	420	0	13
Sign Control	Free			Free	Stop	

Intersection Summary	
Area Type:	Other
Control Type: Unsignalized	
Intersection Capacity Utilization 23.6%	ICU Level of Service A
Analysis Period (min) 15	

Intersection	
Int Delay, s/veh	0.2

Movement	EBT	EBR	WBL	WBT	NBL	NBR
Lane Configurations						
Traffic Vol, veh/h	231	11	0	386	0	12
Future Vol, veh/h	231	11	0	386	0	12
Conflicting Peds, #/hr	0	0	0	0	0	0
Sign Control	Free	Free	Free	Free	Stop	Stop
RT Channelized	-	None	-	None	-	None
Storage Length	-	-	-	-	-	0
Veh in Median Storage, #	0	-	-	0	0	-
Grade, %	0	-	-	0	0	-
Peak Hour Factor	92	92	92	92	92	92
Heavy Vehicles, %	2	2	2	2	2	2
Mvmt Flow	251	12	0	420	0	13

Major/Minor	Major1		Major2		Minor1	
Conflicting Flow All	0	0	-	-	-	257
Stage 1	-	-	-	-	-	-
Stage 2	-	-	-	-	-	-
Critical Hdwy	-	-	-	-	-	6.22
Critical Hdwy Stg 1	-	-	-	-	-	-
Critical Hdwy Stg 2	-	-	-	-	-	-
Follow-up Hdwy	-	-	-	-	-	3.318
Pot Cap-1 Maneuver	-	-	0	-	0	782
Stage 1	-	-	0	-	0	-
Stage 2	-	-	0	-	0	-
Platoon blocked, %	-	-		-		
Mov Cap-1 Maneuver	-	-	-	-	-	782
Mov Cap-2 Maneuver	-	-	-	-	-	-
Stage 1	-	-	-	-	-	-
Stage 2	-	-	-	-	-	-

Approach	EB	WB	NB
HCM Control Delay, s	0	0	9.7
HCM LOS			A

Minor Lane/Major Mvmt	NBLn1	EBT	EBR	WBT
Capacity (veh/h)	782	-	-	-
HCM Lane V/C Ratio	0.017	-	-	-
HCM Control Delay (s)	9.7	-	-	-
HCM Lane LOS	A	-	-	-
HCM 95th %tile Q(veh)	0.1	-	-	-

Lane Group	EBL	EBT	EBR	WBL	WBT	WBR	NBL	NBT	NBR	SBL	SBT	SBR
Lane Configurations												
Traffic Volume (vph)	42	178	23	253	297	60	72	107	69	46	71	17
Future Volume (vph)	42	178	23	253	297	60	72	107	69	46	71	17
Ideal Flow (vphpl)	1900	1900	1900	1900	1900	1900	1900	1900	1900	1900	1900	1900
Storage Length (m)	70.0		70.0	120.0		0.0	55.0		0.0	55.0		0.0
Storage Lanes	1		1	1		0	1		0	1		0
Taper Length (m)	100.0			100.0			100.0			100.0		
Lane Util. Factor	1.00	1.00	1.00	1.00	1.00	1.00	1.00	1.00	1.00	1.00	1.00	1.00
Frt			0.850		0.975			0.941			0.972	
Flt Protected	0.950			0.950			0.950			0.950		
Satd. Flow (prot)	1805	1810	1468	1787	1720	0	1641	1702	0	1492	1574	0
Flt Permitted	0.532			0.553			0.695			0.637		
Satd. Flow (perm)	1011	1810	1468	1040	1720	0	1200	1702	0	1000	1574	0
Right Turn on Red			Yes			Yes			Yes			Yes
Satd. Flow (RTOR)			65		17			33			12	
Link Speed (k/h)		50			50			80			50	
Link Distance (m)		405.7			474.4			304.1			233.9	
Travel Time (s)		29.2			34.2			13.7			16.8	
Peak Hour Factor	0.92	0.92	0.92	0.92	0.92	0.92	0.92	0.92	0.92	0.92	0.92	0.92
Heavy Vehicles (%)	0%	5%	10%	1%	4%	26%	10%	7%	2%	21%	19%	10%
Adj. Flow (vph)	46	193	25	275	323	65	78	116	75	50	77	18
Shared Lane Traffic (%)												
Lane Group Flow (vph)	46	193	25	275	388	0	78	191	0	50	95	0
Turn Type	Perm	NA	Perm	pm+pt	NA		Perm	NA		Perm	NA	
Protected Phases		2		1	6			8			4	
Permitted Phases	2		2	6			8			4		
Detector Phase	2	2	2	1	6		8	8		4	4	
Switch Phase												
Minimum Initial (s)	20.0	20.0	20.0	5.0	20.0		10.0	10.0		10.0	10.0	
Minimum Split (s)	36.0	36.0	36.0	8.0	36.0		29.0	29.0		29.0	29.0	
Total Split (s)	52.0	52.0	52.0	12.0	64.0		36.0	36.0		36.0	36.0	
Total Split (%)	52.0%	52.0%	52.0%	12.0%	64.0%		36.0%	36.0%		36.0%	36.0%	
Maximum Green (s)	45.0	45.0	45.0	9.0	57.0		30.0	30.0		30.0	30.0	
Yellow Time (s)	5.4	5.4	5.4	3.0	5.4		4.1	4.1		4.1	4.1	
All-Red Time (s)	1.6	1.6	1.6	0.0	1.6		1.9	1.9		1.9	1.9	
Lost Time Adjust (s)	0.0	0.0	0.0	0.0	0.0		0.0	0.0		0.0	0.0	
Total Lost Time (s)	7.0	7.0	7.0	3.0	7.0		6.0	6.0		6.0	6.0	
Lead/Lag	Lag	Lag	Lag	Lead								
Lead-Lag Optimize?	Yes	Yes	Yes	Yes								
Vehicle Extension (s)	4.5	4.5	4.5	2.0	4.5		3.0	3.0		3.0	3.0	
Recall Mode	Min	Min	Min	None	Min		None	None		None	None	
Walk Time (s)	17.0	17.0	17.0		17.0		12.0	12.0		12.0	12.0	
Flash Dont Walk (s)	12.0	12.0	12.0		12.0		7.0	7.0		7.0	7.0	
Pedestrian Calls (#/hr)	0	0	0		0		0	0		0	0	
Act Effct Green (s)	20.1	20.1	20.1	35.1	31.0		11.3	11.3		11.3	11.3	
Actuated g/C Ratio	0.36	0.36	0.36	0.63	0.56		0.20	0.20		0.20	0.20	
v/c Ratio	0.13	0.29	0.04	0.36	0.40		0.32	0.51		0.25	0.29	
Control Delay	14.0	14.9	1.0	6.2	8.4		22.9	21.6		22.0	19.3	
Queue Delay	0.0	0.0	0.0	0.0	0.0		0.0	0.0		0.0	0.0	

Lane Group	EBL	EBT	EBR	WBL	WBT	WBR	NBL	NBT	NBR	SBL	SBT	SBR
Total Delay	14.0	14.9	1.0	6.2	8.4		22.9	21.6		22.0	19.3	
LOS	B	B	A	A	A		C	C		C	B	
Approach Delay		13.5			7.4			21.9			20.3	
Approach LOS		B			A			C			C	
Queue Length 50th (m)	3.1	13.9	0.0	9.7	18.4		7.1	14.9		4.5	7.5	
Queue Length 95th (m)	10.1	30.4	1.1	22.5	39.6		17.4	31.5		12.6	18.3	
Internal Link Dist (m)		381.7			450.4			280.1			209.9	
Turn Bay Length (m)	70.0		70.0	120.0			55.0			55.0		
Base Capacity (vph)	823	1474	1207	779	1706		651	939		543	860	
Starvation Cap Reductn	0	0	0	0	0		0	0		0	0	
Spillback Cap Reductn	0	0	0	0	0		0	0		0	0	
Storage Cap Reductn	0	0	0	0	0		0	0		0	0	
Reduced v/c Ratio	0.06	0.13	0.02	0.35	0.23		0.12	0.20		0.09	0.11	

Intersection Summary			
Area Type:	Other		
Cycle Length: 100			
Actuated Cycle Length: 55.4			
Natural Cycle: 75			
Control Type: Semi Act-Uncoord			
Maximum v/c Ratio: 0.51			
Intersection Signal Delay: 12.9		Intersection LOS: B	
Intersection Capacity Utilization 75.8%		ICU Level of Service D	
Analysis Period (min) 15			

Splits and Phases: 2: 28th Avenue & 16th Street

Movement	EBL	EBT	EBR	WBL	WBT	WBR	NBL	NBT	NBR	SBL	SBT	SBR
Lane Configurations												
Traffic Volume (veh/h)	42	178	23	253	297	60	72	107	69	46	71	17
Future Volume (veh/h)	42	178	23	253	297	60	72	107	69	46	71	17
Initial Q (Qb), veh	0	0	0	0	0	0	0	0	0	0	0	0
Ped-Bike Adj(A_pbT)	1.00		1.00	1.00		1.00	1.00		1.00	1.00		1.00
Parking Bus, Adj	1.00	1.00	1.00	1.00	1.00	1.00	1.00	1.00	1.00	1.00	1.00	1.00
Work Zone On Approach		No			No			No			No	
Adj Sat Flow, veh/h/ln	1900	1826	1752	1885	1841	1515	1752	1796	1870	1589	1618	1752
Adj Flow Rate, veh/h	46	193	25	275	323	65	78	116	75	50	77	18
Peak Hour Factor	0.92	0.92	0.92	0.92	0.92	0.92	0.92	0.92	0.92	0.92	0.92	0.92
Percent Heavy Veh, %	0	5	10	1	4	26	10	7	2	21	19	10
Cap, veh/h	514	684	557	709	824	166	319	206	133	236	257	60
Arrive On Green	0.37	0.37	0.37	0.12	0.55	0.55	0.20	0.20	0.20	0.20	0.20	0.20
Sat Flow, veh/h	1011	1826	1485	1795	1487	299	1218	1019	659	1013	1269	297
Grp Volume(v), veh/h	46	193	25	275	0	388	78	0	191	50	0	95
Grp Sat Flow(s),veh/h/ln	1011	1826	1485	1795	0	1787	1218	0	1678	1013	0	1565
Q Serve(g_s), s	1.6	3.9	0.6	4.5	0.0	6.6	3.1	0.0	5.5	2.5	0.0	2.8
Cycle Q Clear(g_c), s	1.6	3.9	0.6	4.5	0.0	6.6	5.9	0.0	5.5	8.0	0.0	2.8
Prop In Lane	1.00		1.00	1.00		0.17	1.00		0.39	1.00		0.19
Lane Grp Cap(c), veh/h	514	684	557	709	0	990	319	0	339	236	0	317
V/C Ratio(X)	0.09	0.28	0.04	0.39	0.00	0.39	0.24	0.00	0.56	0.21	0.00	0.30
Avail Cap(c_a), veh/h	988	1540	1252	791	0	1909	757	0	943	601	0	880
HCM Platoon Ratio	1.00	1.00	1.00	1.00	1.00	1.00	1.00	1.00	1.00	1.00	1.00	1.00
Upstream Filter(I)	1.00	1.00	1.00	1.00	0.00	1.00	1.00	0.00	1.00	1.00	0.00	1.00
Uniform Delay (d), s/veh	10.9	11.7	10.6	7.2	0.0	6.8	20.6	0.0	19.2	22.7	0.0	18.1
Incr Delay (d2), s/veh	0.1	0.4	0.1	0.1	0.0	0.4	0.4	0.0	1.5	0.4	0.0	0.5
Initial Q Delay(d3),s/veh	0.0	0.0	0.0	0.0	0.0	0.0	0.0	0.0	0.0	0.0	0.0	0.0
%ile BackOfQ(50%),veh/ln	0.0	0.1	0.0	0.0	0.0	0.1	0.1	0.0	0.2	0.2	0.0	0.2
Unsig. Movement Delay, s/veh												
LnGrp Delay(d),s/veh	11.0	12.0	10.7	7.4	0.0	7.2	21.0	0.0	20.6	23.2	0.0	18.6
LnGrp LOS	B	B	B	A	A	A	C	A	C	C	A	B
Approach Vol, veh/h		264			663			269			145	
Approach Delay, s/veh		11.7			7.3			20.7			20.2	
Approach LOS		B			A			C			C	

Timer - Assigned Phs	1	2		4		6		8
Phs Duration (G+Y+Rc), s	9.6	27.0		16.8		36.6		16.8
Change Period (Y+Rc), s	3.0	* 7		* 6		* 7		* 6
Max Green Setting (Gmax), s	9.0	* 45		* 30		* 57		* 30
Max Q Clear Time (g_c+I1), s	6.5	5.9		10.0		8.6		7.9
Green Ext Time (p_c), s	0.2	3.2		0.9		5.7		1.7

Intersection Summary		
HCM 6th Ctrl Delay		12.2
HCM 6th LOS		B

Notes

* HCM 6th computational engine requires equal clearance times for the phases crossing the barrier.

Lane Group	EBL	EBR	NBL	NBT	SBT	SBR
Lane Configurations						
Traffic Volume (vph)	15	12	101	234	236	112
Future Volume (vph)	15	12	101	234	236	112
Ideal Flow (vphpl)	1900	1900	1900	1900	1900	1900
Storage Length (m)	0.0	0.0	40.0			15.0
Storage Lanes	1	1	1			1
Taper Length (m)	7.5		7.5			
Lane Util. Factor	1.00	1.00	1.00	1.00	1.00	1.00
Frt		0.850				0.850
Flt Protected	0.950		0.950			
Satd. Flow (prot)	1770	1583	1770	1863	1863	1583
Flt Permitted	0.950		0.950			
Satd. Flow (perm)	1770	1583	1770	1863	1863	1583
Link Speed (k/h)	50			80	80	
Link Distance (m)	127.6			298.9	304.1	
Travel Time (s)	9.2			13.5	13.7	
Peak Hour Factor	0.92	0.92	0.92	0.92	0.92	0.92
Adj. Flow (vph)	16	13	110	254	257	122
Shared Lane Traffic (%)						
Lane Group Flow (vph)	16	13	110	254	257	122
Sign Control	Stop			Free	Free	

Intersection Summary		
Area Type:	Other	
Control Type: Unsignalized		
Intersection Capacity Utilization 31.3%		ICU Level of Service A
Analysis Period (min) 15		

Intersection	
Int Delay, s/veh	1.7

Movement	EBL	EBR	NBL	NBT	SBT	SBR
Lane Configurations						
Traffic Vol, veh/h	15	12	101	234	236	112
Future Vol, veh/h	15	12	101	234	236	112
Conflicting Peds, #/hr	0	0	0	0	0	0
Sign Control	Stop	Stop	Free	Free	Free	Free
RT Channelized	-	None	-	None	-	None
Storage Length	0	0	40	-	-	15
Veh in Median Storage, #	0	-	-	0	0	-
Grade, %	0	-	-	0	0	-
Peak Hour Factor	92	92	92	92	92	92
Heavy Vehicles, %	2	2	2	2	2	2
Mvmt Flow	16	13	110	254	257	122

Major/Minor	Minor2		Major1		Major2	
Conflicting Flow All	731	257	379	0	-	0
Stage 1	257	-	-	-	-	-
Stage 2	474	-	-	-	-	-
Critical Hdwy	6.42	6.22	4.12	-	-	-
Critical Hdwy Stg 1	5.42	-	-	-	-	-
Critical Hdwy Stg 2	5.42	-	-	-	-	-
Follow-up Hdwy	3.518	3.318	2.218	-	-	-
Pot Cap-1 Maneuver	389	782	1179	-	-	-
Stage 1	786	-	-	-	-	-
Stage 2	626	-	-	-	-	-
Platoon blocked, %				-	-	-
Mov Cap-1 Maneuver	353	782	1179	-	-	-
Mov Cap-2 Maneuver	353	-	-	-	-	-
Stage 1	713	-	-	-	-	-
Stage 2	626	-	-	-	-	-

Approach	EB	NB	SB
HCM Control Delay, s	13	2.5	0
HCM LOS	B		

Minor Lane/Major Mvmt	NBL	NBT	EBLn1	EBLn2	SBT	SBR
Capacity (veh/h)	1179	-	353	782	-	-
HCM Lane V/C Ratio	0.093	-	0.046	0.017	-	-
HCM Control Delay (s)	8.4	-	15.7	9.7	-	-
HCM Lane LOS	A	-	C	A	-	-
HCM 95th %tile Q(veh)	0.3	-	0.1	0.1	-	-

Lane Group	EBL	EBR	NBL	NBT	SBT	SBR
Lane Configurations						
Traffic Volume (vph)	81	3	1	254	214	34
Future Volume (vph)	81	3	1	254	214	34
Ideal Flow (vphpl)	1900	1900	1900	1900	1900	1900
Lane Util. Factor	1.00	1.00	1.00	1.00	1.00	1.00
Frt	0.996				0.981	
Flt Protected	0.954					
Satd. Flow (prot)	1770	0	0	1863	1827	0
Flt Permitted	0.954					
Satd. Flow (perm)	1770	0	0	1863	1827	0
Link Speed (k/h)	50			80	80	
Link Distance (m)	308.0			256.5	298.9	
Travel Time (s)	22.2			11.5	13.5	
Peak Hour Factor	0.92	0.92	0.92	0.92	0.92	0.92
Adj. Flow (vph)	88	3	1	276	233	37
Shared Lane Traffic (%)						
Lane Group Flow (vph)	91	0	0	277	270	0
Sign Control	Stop			Free	Free	

Intersection Summary		
Area Type:	Other	
Control Type: Unsignalized		
Intersection Capacity Utilization 25.5%		ICU Level of Service A
Analysis Period (min) 15		

Intersection	
Int Delay, s/veh	1.9

Movement	EBL	EBR	NBL	NBT	SBT	SBR
Lane Configurations						
Traffic Vol, veh/h	81	3	1	254	214	34
Future Vol, veh/h	81	3	1	254	214	34
Conflicting Peds, #/hr	0	0	0	0	0	0
Sign Control	Stop	Stop	Free	Free	Free	Free
RT Channelized	-	None	-	None	-	None
Storage Length	0	-	-	-	-	-
Veh in Median Storage, #	0	-	-	0	0	-
Grade, %	0	-	-	0	0	-
Peak Hour Factor	92	92	92	92	92	92
Heavy Vehicles, %	2	2	2	2	2	2
Mvmt Flow	88	3	1	276	233	37

Major/Minor	Minor2		Major1		Major2	
Conflicting Flow All	530	252	270	0	-	0
Stage 1	252	-	-	-	-	-
Stage 2	278	-	-	-	-	-
Critical Hdwy	6.42	6.22	4.12	-	-	-
Critical Hdwy Stg 1	5.42	-	-	-	-	-
Critical Hdwy Stg 2	5.42	-	-	-	-	-
Follow-up Hdwy	3.518	3.318	2.218	-	-	-
Pot Cap-1 Maneuver	510	787	1293	-	-	-
Stage 1	790	-	-	-	-	-
Stage 2	769	-	-	-	-	-
Platoon blocked, %				-	-	-
Mov Cap-1 Maneuver	509	787	1293	-	-	-
Mov Cap-2 Maneuver	509	-	-	-	-	-
Stage 1	789	-	-	-	-	-
Stage 2	769	-	-	-	-	-

Approach	EB	NB	SB
HCM Control Delay, s	13.5	0	0
HCM LOS	B		

Minor Lane/Major Mvmt	NBL	NBT	EBLn1	SBT	SBR
Capacity (veh/h)	1293	-	516	-	-
HCM Lane V/C Ratio	0.001	-	0.177	-	-
HCM Control Delay (s)	7.8	0	13.5	-	-
HCM Lane LOS	A	A	B	-	-
HCM 95th %tile Q(veh)	0	-	0.6	-	-

Lane Group	EBL	EBR	NBL	NBT	SBT	SBR
Lane Configurations						
Traffic Volume (vph)	125	23	86	130	53	164
Future Volume (vph)	125	23	86	130	53	164
Ideal Flow (vphpl)	1900	1900	1900	1900	1900	1900
Storage Length (m)	0.0	20.0	0.0			0.0
Storage Lanes	1	1	0			0
Taper Length (m)	7.5		7.5			
Lane Util. Factor	1.00	1.00	1.00	1.00	1.00	1.00
Frt		0.850			0.898	
Flt Protected	0.950			0.981		
Satd. Flow (prot)	1805	1615	0	1745	1653	0
Flt Permitted	0.950			0.981		
Satd. Flow (perm)	1805	1615	0	1745	1653	0
Link Speed (k/h)	80			60	80	
Link Distance (m)	310.5			265.1	256.5	
Travel Time (s)	14.0			15.9	11.5	
Peak Hour Factor	0.92	0.92	0.92	0.92	0.92	0.92
Heavy Vehicles (%)	0%	0%	5%	8%	10%	1%
Adj. Flow (vph)	136	25	93	141	58	178
Shared Lane Traffic (%)						
Lane Group Flow (vph)	136	25	0	234	236	0
Sign Control	Stop			Free	Free	

Intersection Summary			
Area Type:	Other		
Control Type: Unsignalized			
Intersection Capacity Utilization 41.4%			ICU Level of Service A
Analysis Period (min) 15			

Intersection	
Int Delay, s/veh	4.6

Movement	EBL	EBR	NBL	NBT	SBT	SBR
Lane Configurations						
Traffic Vol, veh/h	125	23	86	130	53	164
Future Vol, veh/h	125	23	86	130	53	164
Conflicting Peds, #/hr	0	0	0	0	0	0
Sign Control	Stop	Stop	Free	Free	Free	Free
RT Channelized	-	None	-	None	-	Yield
Storage Length	0	20	-	-	-	-
Veh in Median Storage, #	0	-	-	0	0	-
Grade, %	0	-	-	0	0	-
Peak Hour Factor	92	92	92	92	92	92
Heavy Vehicles, %	0	0	5	8	10	1
Mvmt Flow	136	25	93	141	58	178

Major/Minor	Minor2		Major1		Major2	
Conflicting Flow All	474	147	58	0	-	0
Stage 1	147	-	-	-	-	-
Stage 2	327	-	-	-	-	-
Critical Hdwy	6.4	6.2	4.15	-	-	-
Critical Hdwy Stg 1	5.4	-	-	-	-	-
Critical Hdwy Stg 2	5.4	-	-	-	-	-
Follow-up Hdwy	3.5	3.3	2.245	-	-	-
Pot Cap-1 Maneuver	553	905	1527	-	-	-
Stage 1	885	-	-	-	-	-
Stage 2	735	-	-	-	-	-
Platoon blocked, %				-	-	-
Mov Cap-1 Maneuver	517	905	1527	-	-	-
Mov Cap-2 Maneuver	517	-	-	-	-	-
Stage 1	827	-	-	-	-	-
Stage 2	735	-	-	-	-	-

Approach	EB	NB	SB
HCM Control Delay, s	13.6	3	0
HCM LOS	B		

Minor Lane/Major Mvmt	NBL	NBT	EBLn1	EBLn2	SBT	SBR
Capacity (veh/h)	1527	-	517	905	-	-
HCM Lane V/C Ratio	0.061	-	0.263	0.028	-	-
HCM Control Delay (s)	7.5	0	14.4	9.1	-	-
HCM Lane LOS	A	A	B	A	-	-
HCM 95th %tile Q(veh)	0.2	-	1	0.1	-	-

Lane Group	EBL	EBT	WBT	WBR	SBL	SBR
Lane Configurations						
Traffic Volume (vph)	12	124	250	1	24	36
Future Volume (vph)	12	124	250	1	24	36
Ideal Flow (vphpl)	1900	1900	1900	1900	1900	1900
Lane Util. Factor	1.00	1.00	1.00	1.00	1.00	1.00
Frt					0.919	
Flt Protected		0.996			0.980	
Satd. Flow (prot)	0	1855	1863	0	1678	0
Flt Permitted		0.996			0.980	
Satd. Flow (perm)	0	1855	1863	0	1678	0
Link Speed (k/h)		80	80		50	
Link Distance (m)		166.5	310.5		252.9	
Travel Time (s)		7.5	14.0		18.2	
Peak Hour Factor	0.92	0.92	0.92	0.92	0.92	0.92
Adj. Flow (vph)	13	135	272	1	26	39
Shared Lane Traffic (%)						
Lane Group Flow (vph)	0	148	273	0	65	0
Sign Control		Free	Free		Stop	

Intersection Summary			
Area Type:	Other		
Control Type: Unsignalized			
Intersection Capacity Utilization 26.7%		ICU Level of Service A	
Analysis Period (min) 15			

Intersection	
Int Delay, s/veh	1.7

Movement	EBL	EBT	WBT	WBR	SBL	SBR
Lane Configurations						
Traffic Vol, veh/h	12	124	250	1	24	36
Future Vol, veh/h	12	124	250	1	24	36
Conflicting Peds, #/hr	0	0	0	0	0	0
Sign Control	Free	Free	Free	Free	Stop	Stop
RT Channelized	-	None	-	None	-	None
Storage Length	-	-	-	-	0	-
Veh in Median Storage, #	-	0	0	-	0	-
Grade, %	-	0	0	-	0	-
Peak Hour Factor	92	92	92	92	92	92
Heavy Vehicles, %	2	2	2	2	2	2
Mvmt Flow	13	135	272	1	26	39

Major/Minor	Major1		Major2		Minor2	
Conflicting Flow All	273	0	-	0	434	273
Stage 1	-	-	-	-	273	-
Stage 2	-	-	-	-	161	-
Critical Hdwy	4.12	-	-	-	6.42	6.22
Critical Hdwy Stg 1	-	-	-	-	5.42	-
Critical Hdwy Stg 2	-	-	-	-	5.42	-
Follow-up Hdwy	2.218	-	-	-	3.518	3.318
Pot Cap-1 Maneuver	1290	-	-	-	579	766
Stage 1	-	-	-	-	773	-
Stage 2	-	-	-	-	868	-
Platoon blocked, %		-	-	-		
Mov Cap-1 Maneuver	1290	-	-	-	573	766
Mov Cap-2 Maneuver	-	-	-	-	573	-
Stage 1	-	-	-	-	764	-
Stage 2	-	-	-	-	868	-

Approach	EB	WB	SB
HCM Control Delay, s	0.7	0	10.9
HCM LOS			B

Minor Lane/Major Mvmt	EBL	EBT	WBT	WBR	SBLn1
Capacity (veh/h)	1290	-	-	-	675
HCM Lane V/C Ratio	0.01	-	-	-	0.097
HCM Control Delay (s)	7.8	0	-	-	10.9
HCM Lane LOS	A	A	-	-	B
HCM 95th %tile Q(veh)	0	-	-	-	0.3

Lane Group	EBT	EBR	WBL	WBT	NBL	NBR
Lane Configurations						
Traffic Volume (vph)	470	25	0	401	0	84
Future Volume (vph)	470	25	0	401	0	84
Ideal Flow (vphpl)	1900	1900	1900	1900	1900	1900
Lane Util. Factor	1.00	1.00	1.00	1.00	1.00	1.00
Frt	0.993					0.865
Flt Protected						
Satd. Flow (prot)	1850	0	0	1863	0	1611
Flt Permitted						
Satd. Flow (perm)	1850	0	0	1863	0	1611
Link Speed (k/h)	50			50	50	
Link Distance (m)	197.3			405.7	303.8	
Travel Time (s)	14.2			29.2	21.9	
Peak Hour Factor	0.92	0.92	0.92	0.92	0.92	0.92
Adj. Flow (vph)	511	27	0	436	0	91
Shared Lane Traffic (%)						
Lane Group Flow (vph)	538	0	0	436	0	91
Sign Control	Free			Free	Stop	

Intersection Summary	
Area Type:	Other
Control Type: Unsignalized	
Intersection Capacity Utilization 38.1%	ICU Level of Service A
Analysis Period (min) 15	

Intersection	
Int Delay, s/veh	1.1

Movement	EBT	EBR	WBL	WBT	NBL	NBR
Lane Configurations						
Traffic Vol, veh/h	470	25	0	401	0	84
Future Vol, veh/h	470	25	0	401	0	84
Conflicting Peds, #/hr	0	0	0	0	0	0
Sign Control	Free	Free	Free	Free	Stop	Stop
RT Channelized	-	None	-	None	-	None
Storage Length	-	-	-	-	-	0
Veh in Median Storage, #	0	-	-	0	0	-
Grade, %	0	-	-	0	0	-
Peak Hour Factor	92	92	92	92	92	92
Heavy Vehicles, %	2	2	2	2	2	2
Mvmt Flow	511	27	0	436	0	91

Major/Minor	Major1		Major2		Minor1	
Conflicting Flow All	0	0	-	-	-	525
Stage 1	-	-	-	-	-	-
Stage 2	-	-	-	-	-	-
Critical Hdwy	-	-	-	-	-	6.22
Critical Hdwy Stg 1	-	-	-	-	-	-
Critical Hdwy Stg 2	-	-	-	-	-	-
Follow-up Hdwy	-	-	-	-	-	3.318
Pot Cap-1 Maneuver	-	-	0	-	0	552
Stage 1	-	-	0	-	0	-
Stage 2	-	-	0	-	0	-
Platoon blocked, %	-	-		-		
Mov Cap-1 Maneuver	-	-	-	-	-	552
Mov Cap-2 Maneuver	-	-	-	-	-	-
Stage 1	-	-	-	-	-	-
Stage 2	-	-	-	-	-	-

Approach	EB	WB	NB
HCM Control Delay, s	0	0	12.8
HCM LOS			B

Minor Lane/Major Mvmt	NBLn1	EBT	EBR	WBT
Capacity (veh/h)	552	-	-	-
HCM Lane V/C Ratio	0.165	-	-	-
HCM Control Delay (s)	12.8	-	-	-
HCM Lane LOS	B	-	-	-
HCM 95th %tile Q(veh)	0.6	-	-	-

Lane Group	EBL	EBT	EBR	WBL	WBT	WBR	NBL	NBT	NBR	SBL	SBT	SBR
Lane Configurations												
Traffic Volume (vph)	32	439	83	118	285	58	59	102	136	48	117	57
Future Volume (vph)	32	439	83	118	285	58	59	102	136	48	117	57
Ideal Flow (vphpl)	1900	1900	1900	1900	1900	1900	1900	1900	1900	1900	1900	1900
Storage Length (m)	70.0		70.0	120.0		0.0	55.0		0.0	55.0		0.0
Storage Lanes	1		1	1		0	1		0	1		0
Taper Length (m)	100.0			100.0			100.0			100.0		
Lane Util. Factor	1.00	1.00	1.00	1.00	1.00	1.00	1.00	1.00	1.00	1.00	1.00	1.00
Frt			0.850		0.975			0.914			0.951	
Flt Protected	0.950			0.950			0.950			0.950		
Satd. Flow (prot)	1626	1863	1615	1719	1693	0	1736	1619	0	1687	1733	0
Flt Permitted	0.540			0.338			0.639			0.521		
Satd. Flow (perm)	924	1863	1615	612	1693	0	1167	1619	0	925	1733	0
Right Turn on Red			Yes			Yes			Yes			Yes
Satd. Flow (RTOR)			90		17			69			25	
Link Speed (k/h)		50			50			80			50	
Link Distance (m)		405.7			474.4			304.1			233.9	
Travel Time (s)		29.2			34.2			13.7			16.8	
Peak Hour Factor	0.92	0.92	0.92	0.92	0.92	0.92	0.92	0.92	0.92	0.92	0.92	0.92
Heavy Vehicles (%)	11%	2%	0%	5%	5%	31%	4%	17%	0%	7%	0%	13%
Adj. Flow (vph)	35	477	90	128	310	63	64	111	148	52	127	62
Shared Lane Traffic (%)												
Lane Group Flow (vph)	35	477	90	128	373	0	64	259	0	52	189	0
Turn Type	Perm	NA	Perm	pm+pt	NA		Perm	NA		Perm	NA	
Protected Phases		2		1	6			8			4	
Permitted Phases	2		2	6			8			4		
Detector Phase	2	2	2	1	6		8	8		4	4	
Switch Phase												
Minimum Initial (s)	20.0	20.0	20.0	5.0	20.0		10.0	10.0		10.0	10.0	
Minimum Split (s)	36.0	36.0	36.0	8.0	36.0		29.0	29.0		29.0	29.0	
Total Split (s)	52.0	52.0	52.0	12.0	64.0		36.0	36.0		36.0	36.0	
Total Split (%)	52.0%	52.0%	52.0%	12.0%	64.0%		36.0%	36.0%		36.0%	36.0%	
Maximum Green (s)	45.0	45.0	45.0	9.0	57.0		30.0	30.0		30.0	30.0	
Yellow Time (s)	5.4	5.4	5.4	3.0	5.4		4.1	4.1		4.1	4.1	
All-Red Time (s)	1.6	1.6	1.6	0.0	1.6		1.9	1.9		1.9	1.9	
Lost Time Adjust (s)	0.0	0.0	0.0	0.0	0.0		0.0	0.0		0.0	0.0	
Total Lost Time (s)	7.0	7.0	7.0	3.0	7.0		6.0	6.0		6.0	6.0	
Lead/Lag	Lag	Lag	Lag	Lead								
Lead-Lag Optimize?	Yes	Yes	Yes	Yes								
Vehicle Extension (s)	4.5	4.5	4.5	2.0	4.5		3.0	3.0		3.0	3.0	
Recall Mode	Min	Min	Min	None	Min		None	None		None	None	
Walk Time (s)	17.0	17.0	17.0		17.0		12.0	12.0		12.0	12.0	
Flash Dont Walk (s)	12.0	12.0	12.0		12.0		7.0	7.0		7.0	7.0	
Pedestrian Calls (#/hr)	0	0	0		0		0	0		0	0	
Act Effct Green (s)	25.5	25.5	25.5	37.4	33.1		14.3	14.3		14.3	14.3	
Actuated g/C Ratio	0.42	0.42	0.42	0.61	0.54		0.23	0.23		0.23	0.23	
v/c Ratio	0.09	0.61	0.12	0.26	0.40		0.24	0.60		0.24	0.45	
Control Delay	13.6	19.4	3.9	6.7	9.4		24.1	23.3		25.0	23.0	
Queue Delay	0.0	0.0	0.0	0.0	0.0		0.0	0.0		0.0	0.0	

Lane Group	EBL	EBT	EBR	WBL	WBT	WBR	NBL	NBT	NBR	SBL	SBT	SBR
Total Delay	13.6	19.4	3.9	6.7	9.4		24.1	23.3		25.0	23.0	
LOS	B	B	A	A	A		C	C		C	C	
Approach Delay		16.7			8.7			23.4			23.4	
Approach LOS		B			A			C			C	
Queue Length 50th (m)	2.4	41.9	0.0	4.9	20.1		5.8	18.5		4.8	15.6	
Queue Length 95th (m)	9.0	90.4	8.1	14.7	47.9		19.1	51.2		16.6	41.6	
Internal Link Dist (m)		381.7			450.4			280.1			209.9	
Turn Bay Length (m)	70.0		70.0	120.0			55.0			55.0		
Base Capacity (vph)	734	1480	1301	546	1525		604	871		478	909	
Starvation Cap Reductn	0	0	0	0	0		0	0		0	0	
Spillback Cap Reductn	0	0	0	0	0		0	0		0	0	
Storage Cap Reductn	0	0	0	0	0		0	0		0	0	
Reduced v/c Ratio	0.05	0.32	0.07	0.23	0.24		0.11	0.30		0.11	0.21	

Intersection Summary			
Area Type:	Other		
Cycle Length: 100			
Actuated Cycle Length: 61.1			
Natural Cycle: 75			
Control Type: Semi Act-Uncoord			
Maximum v/c Ratio: 0.61			
Intersection Signal Delay: 16.6		Intersection LOS: B	
Intersection Capacity Utilization 78.9%		ICU Level of Service D	
Analysis Period (min) 15			

Splits and Phases: 2: 28th Avenue & 16th Street

Movement	EBL	EBT	EBR	WBL	WBT	WBR	NBL	NBT	NBR	SBL	SBT	SBR
Lane Configurations												
Traffic Volume (veh/h)	32	439	83	118	285	58	59	102	136	48	117	57
Future Volume (veh/h)	32	439	83	118	285	58	59	102	136	48	117	57
Initial Q (Qb), veh	0	0	0	0	0	0	0	0	0	0	0	0
Ped-Bike Adj(A_pbT)	1.00		1.00	1.00		1.00	1.00		1.00	1.00		1.00
Parking Bus, Adj	1.00	1.00	1.00	1.00	1.00	1.00	1.00	1.00	1.00	1.00	1.00	1.00
Work Zone On Approach		No			No			No			No	
Adj Sat Flow, veh/h/ln	1737	1870	1900	1826	1826	1441	1841	1648	1900	1796	1900	1707
Adj Flow Rate, veh/h	35	477	90	128	310	63	64	111	148	52	127	62
Peak Hour Factor	0.92	0.92	0.92	0.92	0.92	0.92	0.92	0.92	0.92	0.92	0.92	0.92
Percent Heavy Veh, %	11	2	0	5	5	31	4	17	0	7	0	13
Cap, veh/h	485	718	618	401	755	153	329	166	222	239	313	153
Arrive On Green	0.38	0.38	0.38	0.08	0.51	0.51	0.26	0.26	0.26	0.26	0.26	0.26
Sat Flow, veh/h	937	1870	1610	1739	1473	299	1175	640	854	1076	1206	589
Grp Volume(v), veh/h	35	477	90	128	0	373	64	0	259	52	0	189
Grp Sat Flow(s),veh/h/ln	937	1870	1610	1739	0	1772	1175	0	1494	1076	0	1794
Q Serve(g_s), s	1.4	12.1	2.1	2.3	0.0	7.4	2.7	0.0	8.9	2.6	0.0	5.0
Cycle Q Clear(g_c), s	1.5	12.1	2.1	2.3	0.0	7.4	7.7	0.0	8.9	11.5	0.0	5.0
Prop In Lane	1.00		1.00	1.00		0.17	1.00		0.57	1.00		0.33
Lane Grp Cap(c), veh/h	485	718	618	401	0	908	329	0	388	239	0	466
V/C Ratio(X)	0.07	0.66	0.15	0.32	0.00	0.41	0.19	0.00	0.67	0.22	0.00	0.41
Avail Cap(c_a), veh/h	863	1472	1268	543	0	1767	640	0	784	524	0	942
HCM Platoon Ratio	1.00	1.00	1.00	1.00	1.00	1.00	1.00	1.00	1.00	1.00	1.00	1.00
Upstream Filter(I)	1.00	1.00	1.00	1.00	0.00	1.00	1.00	0.00	1.00	1.00	0.00	1.00
Uniform Delay (d), s/veh	11.3	14.6	11.5	9.9	0.0	8.6	20.7	0.0	18.9	24.1	0.0	17.5
Incr Delay (d2), s/veh	0.1	1.8	0.2	0.2	0.0	0.5	0.3	0.0	2.0	0.5	0.0	0.6
Initial Q Delay(d3),s/veh	0.0	0.0	0.0	0.0	0.0	0.0	0.0	0.0	0.0	0.0	0.0	0.0
%ile BackOfQ(50%),veh/ln	0.0	0.4	0.0	0.0	0.0	0.1	0.1	0.0	0.3	0.2	0.0	0.3
Unsig. Movement Delay, s/veh												
LnGrp Delay(d),s/veh	11.4	16.4	11.7	10.1	0.0	9.1	21.0	0.0	20.9	24.5	0.0	18.1
LnGrp LOS	B	B	B	B	A	A	C	A	C	C	A	B
Approach Vol, veh/h		602			501			323			241	
Approach Delay, s/veh		15.4			9.4			20.9			19.5	
Approach LOS		B			A			C			B	

Timer - Assigned Phs	1	2		4		6		8
Phs Duration (G+Y+Rc), s	7.3	29.0		20.9		36.3		20.9
Change Period (Y+Rc), s	3.0	* 7		* 6		* 7		* 6
Max Green Setting (Gmax), s	9.0	* 45		* 30		* 57		* 30
Max Q Clear Time (g_c+I1), s	4.3	14.1		13.5		9.4		10.9
Green Ext Time (p_c), s	0.1	7.9		1.4		5.4		2.1

Intersection Summary		
HCM 6th Ctrl Delay		15.2
HCM 6th LOS		B

Notes

* HCM 6th computational engine requires equal clearance times for the phases crossing the barrier.

Lane Group	EBL	EBR	NBL	NBT	SBT	SBR
Lane Configurations						
Traffic Volume (vph)	25	90	21	272	297	24
Future Volume (vph)	25	90	21	272	297	24
Ideal Flow (vphpl)	1900	1900	1900	1900	1900	1900
Storage Length (m)	0.0	0.0	40.0			15.0
Storage Lanes	1	1	1			1
Taper Length (m)	7.5		7.5			
Lane Util. Factor	1.00	1.00	1.00	1.00	1.00	1.00
Frt		0.850				0.850
Flt Protected	0.950		0.950			
Satd. Flow (prot)	1770	1583	1770	1863	1863	1583
Flt Permitted	0.950		0.950			
Satd. Flow (perm)	1770	1583	1770	1863	1863	1583
Link Speed (k/h)	50			80	80	
Link Distance (m)	127.6			298.9	304.1	
Travel Time (s)	9.2			13.5	13.7	
Peak Hour Factor	0.92	0.92	0.92	0.92	0.92	0.92
Adj. Flow (vph)	27	98	23	296	323	26
Shared Lane Traffic (%)						
Lane Group Flow (vph)	27	98	23	296	323	26
Sign Control	Stop			Free	Free	

Intersection Summary		
Area Type:	Other	
Control Type: Unsignalized		
Intersection Capacity Utilization 27.9%		ICU Level of Service A
Analysis Period (min) 15		

Intersection	
Int Delay, s/veh	2.1

Movement	EBL	EBR	NBL	NBT	SBT	SBR
Lane Configurations						
Traffic Vol, veh/h	25	90	21	272	297	24
Future Vol, veh/h	25	90	21	272	297	24
Conflicting Peds, #/hr	0	0	0	0	0	0
Sign Control	Stop	Stop	Free	Free	Free	Free
RT Channelized	-	None	-	None	-	None
Storage Length	0	0	40	-	-	15
Veh in Median Storage, #	0	-	-	0	0	-
Grade, %	0	-	-	0	0	-
Peak Hour Factor	92	92	92	92	92	92
Heavy Vehicles, %	2	2	2	2	2	2
Mvmt Flow	27	98	23	296	323	26

Major/Minor	Minor2		Major1		Major2	
Conflicting Flow All	665	323	349	0	-	0
Stage 1	323	-	-	-	-	-
Stage 2	342	-	-	-	-	-
Critical Hdwy	6.42	6.22	4.12	-	-	-
Critical Hdwy Stg 1	5.42	-	-	-	-	-
Critical Hdwy Stg 2	5.42	-	-	-	-	-
Follow-up Hdwy	3.518	3.318	2.218	-	-	-
Pot Cap-1 Maneuver	425	718	1210	-	-	-
Stage 1	734	-	-	-	-	-
Stage 2	719	-	-	-	-	-
Platoon blocked, %				-	-	-
Mov Cap-1 Maneuver	417	718	1210	-	-	-
Mov Cap-2 Maneuver	417	-	-	-	-	-
Stage 1	720	-	-	-	-	-
Stage 2	719	-	-	-	-	-

Approach	EB	NB	SB
HCM Control Delay, s	11.5	0.6	0
HCM LOS	B		

Minor Lane/Major Mvmt	NBL	NBT	EBLn1	EBLn2	SBT	SBR
Capacity (veh/h)	1210	-	417	718	-	-
HCM Lane V/C Ratio	0.019	-	0.065	0.136	-	-
HCM Control Delay (s)	8	-	14.2	10.8	-	-
HCM Lane LOS	A	-	B	B	-	-
HCM 95th %tile Q(veh)	0.1	-	0.2	0.5	-	-

Lane Group	EBL	EBR	NBL	NBT	SBT	SBR
Lane Configurations						
Traffic Volume (vph)	51	2	3	242	288	99
Future Volume (vph)	51	2	3	242	288	99
Ideal Flow (vphpl)	1900	1900	1900	1900	1900	1900
Lane Util. Factor	1.00	1.00	1.00	1.00	1.00	1.00
Frt	0.995				0.965	
Flt Protected	0.954			0.999		
Satd. Flow (prot)	1768	0	0	1861	1798	0
Flt Permitted	0.954			0.999		
Satd. Flow (perm)	1768	0	0	1861	1798	0
Link Speed (k/h)	50			80	80	
Link Distance (m)	308.0			256.5	298.9	
Travel Time (s)	22.2			11.5	13.5	
Peak Hour Factor	0.92	0.92	0.92	0.92	0.92	0.92
Adj. Flow (vph)	55	2	3	263	313	108
Shared Lane Traffic (%)						
Lane Group Flow (vph)	57	0	0	266	421	0
Sign Control	Stop			Free	Free	

Intersection Summary		
Area Type:	Other	
Control Type: Unsignalized		
Intersection Capacity Utilization 31.2%		ICU Level of Service A
Analysis Period (min) 15		

Intersection	
Int Delay, s/veh	1.1

Movement	EBL	EBR	NBL	NBT	SBT	SBR
Lane Configurations						
Traffic Vol, veh/h	51	2	3	242	288	99
Future Vol, veh/h	51	2	3	242	288	99
Conflicting Peds, #/hr	0	0	0	0	0	0
Sign Control	Stop	Stop	Free	Free	Free	Free
RT Channelized	-	None	-	None	-	None
Storage Length	0	-	-	-	-	-
Veh in Median Storage, #	0	-	-	0	0	-
Grade, %	0	-	-	0	0	-
Peak Hour Factor	92	92	92	92	92	92
Heavy Vehicles, %	2	2	2	2	2	2
Mvmt Flow	55	2	3	263	313	108

Major/Minor	Minor2		Major1		Major2	
Conflicting Flow All	636	367	421	0	-	0
Stage 1	367	-	-	-	-	-
Stage 2	269	-	-	-	-	-
Critical Hdwy	6.42	6.22	4.12	-	-	-
Critical Hdwy Stg 1	5.42	-	-	-	-	-
Critical Hdwy Stg 2	5.42	-	-	-	-	-
Follow-up Hdwy	3.518	3.318	2.218	-	-	-
Pot Cap-1 Maneuver	442	678	1138	-	-	-
Stage 1	701	-	-	-	-	-
Stage 2	776	-	-	-	-	-
Platoon blocked, %				-	-	-
Mov Cap-1 Maneuver	441	678	1138	-	-	-
Mov Cap-2 Maneuver	441	-	-	-	-	-
Stage 1	699	-	-	-	-	-
Stage 2	776	-	-	-	-	-

Approach	EB	NB	SB
HCM Control Delay, s	14.2	0.1	0
HCM LOS	B		

Minor Lane/Major Mvmt	NBL	NBT	EBLn1	SBT	SBR
Capacity (veh/h)	1138	-	447	-	-
HCM Lane V/C Ratio	0.003	-	0.129	-	-
HCM Control Delay (s)	8.2	0	14.2	-	-
HCM Lane LOS	A	A	B	-	-
HCM 95th %tile Q(veh)	0	-	0.4	-	-

Lane Group	EBL	EBR	NBL	NBT	SBT	SBR
Lane Configurations						
Traffic Volume (vph)	172	53	31	72	142	147
Future Volume (vph)	172	53	31	72	142	147
Ideal Flow (vphpl)	1900	1900	1900	1900	1900	1900
Storage Length (m)	0.0	20.0	0.0			0.0
Storage Lanes	1	1	0			0
Taper Length (m)	7.5		7.5			
Lane Util. Factor	1.00	1.00	1.00	1.00	1.00	1.00
Frt		0.850			0.931	
Flt Protected	0.950			0.985		
Satd. Flow (prot)	1805	1615	0	1705	1743	0
Flt Permitted	0.950			0.985		
Satd. Flow (perm)	1805	1615	0	1705	1743	0
Link Speed (k/h)	80			60	80	
Link Distance (m)	310.5			265.1	256.5	
Travel Time (s)	14.0			15.9	11.5	
Peak Hour Factor	0.92	0.92	0.92	0.92	0.92	0.92
Heavy Vehicles (%)	0%	0%	0%	14%	2%	1%
Adj. Flow (vph)	187	58	34	78	154	160
Shared Lane Traffic (%)						
Lane Group Flow (vph)	187	58	0	112	314	0
Sign Control	Stop			Free	Free	

Intersection Summary			
Area Type:	Other		
Control Type: Unsignalized			
Intersection Capacity Utilization 41.5%			ICU Level of Service A
Analysis Period (min) 15			

Intersection	
Int Delay, s/veh	5

Movement	EBL	EBR	NBL	NBT	SBT	SBR
Lane Configurations						
Traffic Vol, veh/h	172	53	31	72	142	147
Future Vol, veh/h	172	53	31	72	142	147
Conflicting Peds, #/hr	0	0	0	0	0	0
Sign Control	Stop	Stop	Free	Free	Free	Free
RT Channelized	-	None	-	None	-	Yield
Storage Length	0	20	-	-	-	-
Veh in Median Storage, #	0	-	-	0	0	-
Grade, %	0	-	-	0	0	-
Peak Hour Factor	92	92	92	92	92	92
Heavy Vehicles, %	0	0	0	14	2	1
Mvmt Flow	187	58	34	78	154	160

Major/Minor	Minor2		Major1		Major2	
Conflicting Flow All	380	234	154	0	-	0
Stage 1	234	-	-	-	-	-
Stage 2	146	-	-	-	-	-
Critical Hdwy	6.4	6.2	4.1	-	-	-
Critical Hdwy Stg 1	5.4	-	-	-	-	-
Critical Hdwy Stg 2	5.4	-	-	-	-	-
Follow-up Hdwy	3.5	3.3	2.2	-	-	-
Pot Cap-1 Maneuver	626	810	1439	-	-	-
Stage 1	810	-	-	-	-	-
Stage 2	886	-	-	-	-	-
Platoon blocked, %				-	-	-
Mov Cap-1 Maneuver	610	810	1439	-	-	-
Mov Cap-2 Maneuver	610	-	-	-	-	-
Stage 1	790	-	-	-	-	-
Stage 2	886	-	-	-	-	-

Approach	EB	NB	SB
HCM Control Delay, s	12.6	2.3	0
HCM LOS	B		

Minor Lane/Major Mvmt	NBL	NBT	EBLn1	EBLn2	SBT	SBR
Capacity (veh/h)	1439	-	610	810	-	-
HCM Lane V/C Ratio	0.023	-	0.306	0.071	-	-
HCM Control Delay (s)	7.6	0	13.5	9.8	-	-
HCM Lane LOS	A	A	B	A	-	-
HCM 95th %tile Q(veh)	0.1	-	1.3	0.2	-	-

Lane Group	EBL	EBT	WBT	WBR	SBL	SBR
Lane Configurations						
Traffic Volume (vph)	35	210	175	4	16	22
Future Volume (vph)	35	210	175	4	16	22
Ideal Flow (vphpl)	1900	1900	1900	1900	1900	1900
Lane Util. Factor	1.00	1.00	1.00	1.00	1.00	1.00
Frt			0.997		0.921	
Flt Protected		0.993			0.980	
Satd. Flow (prot)	0	1850	1857	0	1681	0
Flt Permitted		0.993			0.980	
Satd. Flow (perm)	0	1850	1857	0	1681	0
Link Speed (k/h)		80	80		50	
Link Distance (m)		166.5	310.5		252.9	
Travel Time (s)		7.5	14.0		18.2	
Peak Hour Factor	0.92	0.92	0.92	0.92	0.92	0.92
Adj. Flow (vph)	38	228	190	4	17	24
Shared Lane Traffic (%)						
Lane Group Flow (vph)	0	266	194	0	41	0
Sign Control		Free	Free		Stop	

Intersection Summary			
Area Type:	Other		
Control Type: Unsignalized			
Intersection Capacity Utilization 35.8%		ICU Level of Service A	
Analysis Period (min) 15			

Intersection	
Int Delay, s/veh	1.5

Movement	EBL	EBT	WBT	WBR	SBL	SBR
Lane Configurations						
Traffic Vol, veh/h	35	210	175	4	16	22
Future Vol, veh/h	35	210	175	4	16	22
Conflicting Peds, #/hr	0	0	0	0	0	0
Sign Control	Free	Free	Free	Free	Stop	Stop
RT Channelized	-	None	-	None	-	None
Storage Length	-	-	-	-	0	-
Veh in Median Storage, #	-	0	0	-	0	-
Grade, %	-	0	0	-	0	-
Peak Hour Factor	92	92	92	92	92	92
Heavy Vehicles, %	2	2	2	2	2	2
Mvmt Flow	38	228	190	4	17	24

Major/Minor	Major1		Major2		Minor2	
Conflicting Flow All	194	0	-	0	496	192
Stage 1	-	-	-	-	192	-
Stage 2	-	-	-	-	304	-
Critical Hdwy	4.12	-	-	-	6.42	6.22
Critical Hdwy Stg 1	-	-	-	-	5.42	-
Critical Hdwy Stg 2	-	-	-	-	5.42	-
Follow-up Hdwy	2.218	-	-	-	3.518	3.318
Pot Cap-1 Maneuver	1379	-	-	-	533	850
Stage 1	-	-	-	-	841	-
Stage 2	-	-	-	-	748	-
Platoon blocked, %		-	-	-		
Mov Cap-1 Maneuver	1379	-	-	-	516	850
Mov Cap-2 Maneuver	-	-	-	-	516	-
Stage 1	-	-	-	-	814	-
Stage 2	-	-	-	-	748	-

Approach	EB	WB	SB
HCM Control Delay, s	1.1	0	10.7
HCM LOS			B

Minor Lane/Major Mvmt	EBL	EBT	WBT	WBR	SBLn1
Capacity (veh/h)	1379	-	-	-	668
HCM Lane V/C Ratio	0.028	-	-	-	0.062
HCM Control Delay (s)	7.7	0	-	-	10.7
HCM Lane LOS	A	A	-	-	B
HCM 95th %tile Q(veh)	0.1	-	-	-	0.2

Appendix H

2033 Total Traffic Operations Reports

Lane Group	EBT	EBR	WBL	WBT	NBL	NBR
Lane Configurations						
Traffic Volume (vph)	231	24	0	394	0	12
Future Volume (vph)	231	24	0	394	0	12
Ideal Flow (vphpl)	1900	1900	1900	1900	1900	1900
Lane Util. Factor	1.00	1.00	1.00	1.00	1.00	1.00
Frt	0.987					0.865
Flt Protected						
Satd. Flow (prot)	1839	0	0	1863	0	1611
Flt Permitted						
Satd. Flow (perm)	1839	0	0	1863	0	1611
Link Speed (k/h)	50			50	50	
Link Distance (m)	197.3			405.7	303.8	
Travel Time (s)	14.2			29.2	21.9	
Peak Hour Factor	0.92	0.92	0.92	0.92	0.92	0.92
Adj. Flow (vph)	251	26	0	428	0	13
Shared Lane Traffic (%)						
Lane Group Flow (vph)	277	0	0	428	0	13
Sign Control	Free			Free	Stop	

Intersection Summary	
Area Type:	Other
Control Type: Unsignalized	
Intersection Capacity Utilization 24.1%	ICU Level of Service A
Analysis Period (min) 15	

Intersection	
Int Delay, s/veh	0.2

Movement	EBT	EBR	WBL	WBT	NBL	NBR
Lane Configurations						
Traffic Vol, veh/h	231	24	0	394	0	12
Future Vol, veh/h	231	24	0	394	0	12
Conflicting Peds, #/hr	0	0	0	0	0	0
Sign Control	Free	Free	Free	Free	Stop	Stop
RT Channelized	-	None	-	None	-	None
Storage Length	-	-	-	-	-	0
Veh in Median Storage, #	0	-	-	0	0	-
Grade, %	0	-	-	0	0	-
Peak Hour Factor	92	92	92	92	92	92
Heavy Vehicles, %	2	2	2	2	2	2
Mvmt Flow	251	26	0	428	0	13

Major/Minor	Major1		Major2		Minor1	
Conflicting Flow All	0	0	-	-	-	264
Stage 1	-	-	-	-	-	-
Stage 2	-	-	-	-	-	-
Critical Hdwy	-	-	-	-	-	6.22
Critical Hdwy Stg 1	-	-	-	-	-	-
Critical Hdwy Stg 2	-	-	-	-	-	-
Follow-up Hdwy	-	-	-	-	-	3.318
Pot Cap-1 Maneuver	-	-	0	-	0	775
Stage 1	-	-	0	-	0	-
Stage 2	-	-	0	-	0	-
Platoon blocked, %	-	-		-		
Mov Cap-1 Maneuver	-	-	-	-	-	775
Mov Cap-2 Maneuver	-	-	-	-	-	-
Stage 1	-	-	-	-	-	-
Stage 2	-	-	-	-	-	-

Approach	EB	WB	NB
HCM Control Delay, s	0	0	9.7
HCM LOS			A

Minor Lane/Major Mvmt	NBLn1	EBT	EBR	WBT
Capacity (veh/h)	775	-	-	-
HCM Lane V/C Ratio	0.017	-	-	-
HCM Control Delay (s)	9.7	-	-	-
HCM Lane LOS	A	-	-	-
HCM 95th %tile Q(veh)	0.1	-	-	-

Lane Group	EBL	EBT	EBR	WBL	WBT	WBR	NBL	NBT	NBR	SBL	SBT	SBR
Lane Configurations												
Traffic Volume (vph)	42	178	23	278	297	60	80	130	84	46	109	17
Future Volume (vph)	42	178	23	278	297	60	80	130	84	46	109	17
Ideal Flow (vphpl)	1900	1900	1900	1900	1900	1900	1900	1900	1900	1900	1900	1900
Storage Length (m)	70.0		70.0	120.0		0.0	55.0		0.0	55.0		0.0
Storage Lanes	1		1	1		0	1		0	1		0
Taper Length (m)	100.0			100.0			100.0			100.0		
Lane Util. Factor	1.00	1.00	1.00	1.00	1.00	1.00	1.00	1.00	1.00	1.00	1.00	1.00
Frt			0.850		0.975			0.941			0.980	
Flt Protected	0.950			0.950			0.950			0.950		
Satd. Flow (prot)	1805	1810	1468	1787	1720	0	1641	1702	0	1492	1581	0
Flt Permitted	0.532			0.554			0.670			0.587		
Satd. Flow (perm)	1011	1810	1468	1042	1720	0	1157	1702	0	922	1581	0
Right Turn on Red			Yes			Yes			Yes			Yes
Satd. Flow (RTOR)			65		17			33			8	
Link Speed (k/h)		50			50			80			50	
Link Distance (m)		405.7			474.4			304.1			233.9	
Travel Time (s)		29.2			34.2			13.7			16.8	
Peak Hour Factor	0.92	0.92	0.92	0.92	0.92	0.92	0.92	0.92	0.92	0.92	0.92	0.92
Heavy Vehicles (%)	0%	5%	10%	1%	4%	26%	10%	7%	2%	21%	19%	10%
Adj. Flow (vph)	46	193	25	302	323	65	87	141	91	50	118	18
Shared Lane Traffic (%)												
Lane Group Flow (vph)	46	193	25	302	388	0	87	232	0	50	136	0
Turn Type	Perm	NA	Perm	pm+pt	NA		Perm	NA		Perm	NA	
Protected Phases		2		1	6			8			4	
Permitted Phases	2		2	6			8			4		
Detector Phase	2	2	2	1	6		8	8		4	4	
Switch Phase												
Minimum Initial (s)	20.0	20.0	20.0	5.0	20.0		10.0	10.0		10.0	10.0	
Minimum Split (s)	36.0	36.0	36.0	8.0	36.0		29.0	29.0		29.0	29.0	
Total Split (s)	52.0	52.0	52.0	12.0	64.0		36.0	36.0		36.0	36.0	
Total Split (%)	52.0%	52.0%	52.0%	12.0%	64.0%		36.0%	36.0%		36.0%	36.0%	
Maximum Green (s)	45.0	45.0	45.0	9.0	57.0		30.0	30.0		30.0	30.0	
Yellow Time (s)	5.4	5.4	5.4	3.0	5.4		4.1	4.1		4.1	4.1	
All-Red Time (s)	1.6	1.6	1.6	0.0	1.6		1.9	1.9		1.9	1.9	
Lost Time Adjust (s)	0.0	0.0	0.0	0.0	0.0		0.0	0.0		0.0	0.0	
Total Lost Time (s)	7.0	7.0	7.0	3.0	7.0		6.0	6.0		6.0	6.0	
Lead/Lag	Lag	Lag	Lag	Lead								
Lead-Lag Optimize?	Yes	Yes	Yes	Yes								
Vehicle Extension (s)	4.5	4.5	4.5	2.0	4.5		3.0	3.0		3.0	3.0	
Recall Mode	Min	Min	Min	None	Min		None	None		None	None	
Walk Time (s)	17.0	17.0	17.0		17.0		12.0	12.0		12.0	12.0	
Flash Dont Walk (s)	12.0	12.0	12.0		12.0		7.0	7.0		7.0	7.0	
Pedestrian Calls (#/hr)	0	0	0		0		0	0		0	0	
Act Effct Green (s)	20.1	20.1	20.1	35.3	31.3		12.4	12.4		12.4	12.4	
Actuated g/C Ratio	0.35	0.35	0.35	0.62	0.55		0.22	0.22		0.22	0.22	
v/c Ratio	0.13	0.30	0.04	0.40	0.41		0.35	0.59		0.25	0.39	
Control Delay	15.0	15.9	1.0	7.0	9.0		23.0	23.5		21.8	21.4	
Queue Delay	0.0	0.0	0.0	0.0	0.0		0.0	0.0		0.0	0.0	

Lane Group	EBL	EBT	EBR	WBL	WBT	WBR	NBL	NBT	NBR	SBL	SBT	SBR
Total Delay	15.0	15.9	1.0	7.0	9.0		23.0	23.5		21.8	21.4	
LOS	B	B	A	A	A		C	C		C	C	
Approach Delay		14.3			8.2			23.4			21.5	
Approach LOS		B			A			C			C	
Queue Length 50th (m)	3.3	14.9	0.0	12.1	19.9		8.2	19.5		4.6	12.1	
Queue Length 95th (m)	10.5	32.0	1.1	27.7	43.1		19.0	38.4		12.6	25.4	
Internal Link Dist (m)		381.7			450.4			280.1			209.9	
Turn Bay Length (m)	70.0		70.0	120.0			55.0			55.0		
Base Capacity (vph)	804	1440	1181	767	1685		614	918		489	842	
Starvation Cap Reductn	0	0	0	0	0		0	0		0	0	
Spillback Cap Reductn	0	0	0	0	0		0	0		0	0	
Storage Cap Reductn	0	0	0	0	0		0	0		0	0	
Reduced v/c Ratio	0.06	0.13	0.02	0.39	0.23		0.14	0.25		0.10	0.16	

Intersection Summary

Area Type: Other
Cycle Length: 100
Actuated Cycle Length: 56.7
Natural Cycle: 75
Control Type: Semi Act-Uncoord
Maximum v/c Ratio: 0.59
Intersection Signal Delay: 14.3 — Intersection LOS: B
Intersection Capacity Utilization 77.9% — ICU Level of Service D
Analysis Period (min) 15

Splits and Phases: 2: 28th Avenue & 16th Street

Movement	EBL	EBT	EBR	WBL	WBT	WBR	NBL	NBT	NBR	SBL	SBT	SBR
Lane Configurations												
Traffic Volume (veh/h)	42	178	23	278	297	60	80	130	84	46	109	17
Future Volume (veh/h)	42	178	23	278	297	60	80	130	84	46	109	17
Initial Q (Qb), veh	0	0	0	0	0	0	0	0	0	0	0	0
Ped-Bike Adj(A_pbT)	1.00		1.00	1.00		1.00	1.00		1.00	1.00		1.00
Parking Bus, Adj	1.00	1.00	1.00	1.00	1.00	1.00	1.00	1.00	1.00	1.00	1.00	1.00
Work Zone On Approach		No			No			No			No	
Adj Sat Flow, veh/h/ln	1900	1826	1752	1885	1841	1515	1752	1796	1870	1589	1618	1752
Adj Flow Rate, veh/h	46	193	25	302	323	65	87	141	91	50	118	18
Peak Hour Factor	0.92	0.92	0.92	0.92	0.92	0.92	0.92	0.92	0.92	0.92	0.92	0.92
Percent Heavy Veh, %	0	5	10	1	4	26	10	7	2	21	19	10
Cap, veh/h	487	648	527	694	805	162	310	232	150	229	312	48
Arrive On Green	0.36	0.36	0.36	0.13	0.54	0.54	0.23	0.23	0.23	0.23	0.23	0.23
Sat Flow, veh/h	1011	1826	1485	1795	1487	299	1174	1020	658	976	1372	209
Grp Volume(v), veh/h	46	193	25	302	0	388	87	0	232	50	0	136
Grp Sat Flow(s),veh/h/ln	1011	1826	1485	1795	0	1787	1174	0	1678	976	0	1581
Q Serve(g_s), s	1.7	4.3	0.6	5.4	0.0	7.2	3.8	0.0	7.0	2.7	0.0	4.1
Cycle Q Clear(g_c), s	1.7	4.3	0.6	5.4	0.0	7.2	7.9	0.0	7.0	9.7	0.0	4.1
Prop In Lane	1.00		1.00	1.00		0.17	1.00		0.39	1.00		0.13
Lane Grp Cap(c), veh/h	487	648	527	694	0	968	310	0	382	229	0	360
V/C Ratio(X)	0.09	0.30	0.05	0.44	0.00	0.40	0.28	0.00	0.61	0.22	0.00	0.38
Avail Cap(c_a), veh/h	936	1459	1186	742	0	1808	668	0	894	526	0	842
HCM Platoon Ratio	1.00	1.00	1.00	1.00	1.00	1.00	1.00	1.00	1.00	1.00	1.00	1.00
Upstream Filter(I)	1.00	1.00	1.00	1.00	0.00	1.00	1.00	0.00	1.00	1.00	0.00	1.00
Uniform Delay (d), s/veh	12.3	13.1	11.9	8.2	0.0	7.6	21.7	0.0	19.5	23.8	0.0	18.4
Incr Delay (d2), s/veh	0.1	0.4	0.1	0.2	0.0	0.5	0.5	0.0	1.6	0.5	0.0	0.7
Initial Q Delay(d3),s/veh	0.0	0.0	0.0	0.0	0.0	0.0	0.0	0.0	0.0	0.0	0.0	0.0
%ile BackOfQ(50%),veh/ln	0.0	0.1	0.0	0.0	0.0	0.1	0.2	0.0	0.4	0.2	0.0	0.3
Unsig. Movement Delay, s/veh												
LnGrp Delay(d),s/veh	12.4	13.5	12.0	8.3	0.0	8.0	22.2	0.0	21.1	24.3	0.0	19.0
LnGrp LOS	B	B	B	A	A	A	C	A	C	C	A	B
Approach Vol, veh/h		264			690			319			186	
Approach Delay, s/veh		13.2			8.2			21.4			20.5	
Approach LOS		B			A			C			C	

Timer - Assigned Phs	1	2		4		6		8
Phs Duration (G+Y+Rc), s	10.5	27.0		18.8		37.5		18.8
Change Period (Y+Rc), s	3.0	* 7		* 6		* 7		* 6
Max Green Setting (Gmax), s	9.0	* 45		* 30		* 57		* 30
Max Q Clear Time (g_c+I1), s	7.4	6.3		11.7		9.2		9.9
Green Ext Time (p_c), s	0.1	3.2		1.1		5.6		2.0

Intersection Summary		
HCM 6th Ctrl Delay		13.5
HCM 6th LOS		B

Notes

* HCM 6th computational engine requires equal clearance times for the phases crossing the barrier.

Lane Group	EBL	EBR	NBL	NBT	SBT	SBR
Lane Configurations						
Traffic Volume (vph)	61	120	279	234	236	175
Future Volume (vph)	61	120	279	234	236	175
Ideal Flow (vphpl)	1900	1900	1900	1900	1900	1900
Storage Length (m)	0.0	0.0	40.0			15.0
Storage Lanes	1	1	1			1
Taper Length (m)	7.5		7.5			
Lane Util. Factor	1.00	1.00	1.00	1.00	1.00	1.00
Frt		0.850				0.850
Flt Protected	0.950		0.950			
Satd. Flow (prot)	1770	1583	1770	1863	1863	1583
Flt Permitted	0.950		0.950			
Satd. Flow (perm)	1770	1583	1770	1863	1863	1583
Link Speed (k/h)	50			80	80	
Link Distance (m)	127.6			298.9	304.1	
Travel Time (s)	9.2			13.5	13.7	
Peak Hour Factor	0.92	0.92	0.92	0.92	0.92	0.92
Adj. Flow (vph)	66	130	303	254	257	190
Shared Lane Traffic (%)						
Lane Group Flow (vph)	66	130	303	254	257	190
Sign Control	Stop			Free	Free	

Intersection Summary		
Area Type:	Other	
Control Type: Unsignalized		
Intersection Capacity Utilization 41.3%		ICU Level of Service A
Analysis Period (min) 15		

Intersection	
Int Delay, s/veh	5.7

Movement	EBL	EBR	NBL	NBT	SBT	SBR
Lane Configurations						
Traffic Vol, veh/h	61	120	279	234	236	175
Future Vol, veh/h	61	120	279	234	236	175
Conflicting Peds, #/hr	0	0	0	0	0	0
Sign Control	Stop	Stop	Free	Free	Free	Free
RT Channelized	-	None	-	None	-	None
Storage Length	0	0	40	-	-	15
Veh in Median Storage, #	0	-	-	0	0	-
Grade, %	0	-	-	0	0	-
Peak Hour Factor	92	92	92	92	92	92
Heavy Vehicles, %	2	2	2	2	2	2
Mvmt Flow	66	130	303	254	257	190

Major/Minor	Minor2		Major1		Major2	
Conflicting Flow All	1117	257	447	0	-	0
Stage 1	257	-	-	-	-	-
Stage 2	860	-	-	-	-	-
Critical Hdwy	6.42	6.22	4.12	-	-	-
Critical Hdwy Stg 1	5.42	-	-	-	-	-
Critical Hdwy Stg 2	5.42	-	-	-	-	-
Follow-up Hdwy	3.518	3.318	2.218	-	-	-
Pot Cap-1 Maneuver	229	782	1113	-	-	-
Stage 1	786	-	-	-	-	-
Stage 2	414	-	-	-	-	-
Platoon blocked, %				-	-	-
Mov Cap-1 Maneuver	167	782	1113	-	-	-
Mov Cap-2 Maneuver	167	-	-	-	-	-
Stage 1	572	-	-	-	-	-
Stage 2	414	-	-	-	-	-

Approach	EB	NB	SB
HCM Control Delay, s	20.5	5.1	0
HCM LOS	C		

Minor Lane/Major Mvmt	NBL	NBT	EBLn1	EBLn2	SBT	SBR
Capacity (veh/h)	1113	-	167	782	-	-
HCM Lane V/C Ratio	0.272	-	0.397	0.167	-	-
HCM Control Delay (s)	9.4	-	40.1	10.5	-	-
HCM Lane LOS	A	-	E	B	-	-
HCM 95th %tile Q(veh)	1.1	-	1.7	0.6	-	-

Lane Group	EBL	EBR	NBL	NBT	SBT	SBR
Lane Configurations						
Traffic Volume (vph)	81	3	1	432	322	34
Future Volume (vph)	81	3	1	432	322	34
Ideal Flow (vphpl)	1900	1900	1900	1900	1900	1900
Lane Util. Factor	1.00	1.00	1.00	1.00	1.00	1.00
Frt	0.996				0.987	
Flt Protected	0.954					
Satd. Flow (prot)	1770	0	0	1863	1839	0
Flt Permitted	0.954					
Satd. Flow (perm)	1770	0	0	1863	1839	0
Link Speed (k/h)	50			80	80	
Link Distance (m)	308.0			256.5	298.9	
Travel Time (s)	22.2			11.5	13.5	
Peak Hour Factor	0.92	0.92	0.92	0.92	0.92	0.92
Adj. Flow (vph)	88	3	1	470	350	37
Shared Lane Traffic (%)						
Lane Group Flow (vph)	91	0	0	471	387	0
Sign Control	Stop			Free	Free	

Intersection Summary			
Area Type:	Other		
Control Type: Unsignalized			
Intersection Capacity Utilization 34.9%		ICU Level of Service A	
Analysis Period (min) 15			

Intersection	
Int Delay, s/veh	1.9

Movement	EBL	EBR	NBL	NBT	SBT	SBR
Lane Configurations						
Traffic Vol, veh/h	81	3	1	432	322	34
Future Vol, veh/h	81	3	1	432	322	34
Conflicting Peds, #/hr	0	0	0	0	0	0
Sign Control	Stop	Stop	Free	Free	Free	Free
RT Channelized	-	None	-	None	-	None
Storage Length	0	-	-	-	-	-
Veh in Median Storage, #	0	-	-	0	0	-
Grade, %	0	-	-	0	0	-
Peak Hour Factor	92	92	92	92	92	92
Heavy Vehicles, %	2	2	2	2	2	2
Mvmt Flow	88	3	1	470	350	37

Major/Minor	Minor2		Major1		Major2	
Conflicting Flow All	841	369	387	0	-	0
Stage 1	369	-	-	-	-	-
Stage 2	472	-	-	-	-	-
Critical Hdwy	6.42	6.22	4.12	-	-	-
Critical Hdwy Stg 1	5.42	-	-	-	-	-
Critical Hdwy Stg 2	5.42	-	-	-	-	-
Follow-up Hdwy	3.518	3.318	2.218	-	-	-
Pot Cap-1 Maneuver	335	677	1171	-	-	-
Stage 1	699	-	-	-	-	-
Stage 2	628	-	-	-	-	-
Platoon blocked, %				-	-	-
Mov Cap-1 Maneuver	335	677	1171	-	-	-
Mov Cap-2 Maneuver	335	-	-	-	-	-
Stage 1	698	-	-	-	-	-
Stage 2	628	-	-	-	-	-

Approach	EB	NB	SB
HCM Control Delay, s	19.4	0	0
HCM LOS	C		

Minor Lane/Major Mvmt	NBL	NBT	EBLn1	SBT	SBR
Capacity (veh/h)	1171	-	341	-	-
HCM Lane V/C Ratio	0.001	-	0.268	-	-
HCM Control Delay (s)	8.1	0	19.4	-	-
HCM Lane LOS	A	A	C	-	-
HCM 95th %tile Q(veh)	0	-	1.1	-	-

Lane Group	EBL	EBR	NBL	NBT	SBT	SBR
Lane Configurations						
Traffic Volume (vph)	265	23	86	168	76	249
Future Volume (vph)	265	23	86	168	76	249
Ideal Flow (vphpl)	1900	1900	1900	1900	1900	1900
Storage Length (m)	0.0	20.0	0.0			0.0
Storage Lanes	1	1	0			0
Taper Length (m)	7.5		7.5			
Lane Util. Factor	1.00	1.00	1.00	1.00	1.00	1.00
Frt		0.850			0.897	
Flt Protected	0.950			0.983		
Satd. Flow (prot)	1805	1615	0	1746	1653	0
Flt Permitted	0.950			0.983		
Satd. Flow (perm)	1805	1615	0	1746	1653	0
Link Speed (k/h)	80			60	80	
Link Distance (m)	310.5			265.1	256.5	
Travel Time (s)	14.0			15.9	11.5	
Peak Hour Factor	0.92	0.92	0.92	0.92	0.92	0.92
Heavy Vehicles (%)	0%	0%	5%	8%	10%	1%
Adj. Flow (vph)	288	25	93	183	83	271
Shared Lane Traffic (%)						
Lane Group Flow (vph)	288	25	0	276	354	0
Sign Control	Stop			Free	Free	

Intersection Summary			
Area Type:	Other		
Control Type: Unsignalized			
Intersection Capacity Utilization 57.6%			ICU Level of Service B
Analysis Period (min) 15			

Intersection	
Int Delay, s/veh	9.3

Movement	EBL	EBR	NBL	NBT	SBT	SBR
Lane Configurations						
Traffic Vol, veh/h	265	23	86	168	76	249
Future Vol, veh/h	265	23	86	168	76	249
Conflicting Peds, #/hr	0	0	0	0	0	0
Sign Control	Stop	Stop	Free	Free	Free	Free
RT Channelized	-	None	-	None	-	Yield
Storage Length	0	20	-	-	-	-
Veh in Median Storage, #	0	-	-	0	0	-
Grade, %	0	-	-	0	0	-
Peak Hour Factor	92	92	92	92	92	92
Heavy Vehicles, %	0	0	5	8	10	1
Mvmt Flow	288	25	93	183	83	271

Major/Minor	Minor2		Major1		Major2	
Conflicting Flow All	588	219	83	0	-	0
Stage 1	219	-	-	-	-	-
Stage 2	369	-	-	-	-	-
Critical Hdwy	6.4	6.2	4.15	-	-	-
Critical Hdwy Stg 1	5.4	-	-	-	-	-
Critical Hdwy Stg 2	5.4	-	-	-	-	-
Follow-up Hdwy	3.5	3.3	2.245	-	-	-
Pot Cap-1 Maneuver	475	826	1495	-	-	-
Stage 1	822	-	-	-	-	-
Stage 2	704	-	-	-	-	-
Platoon blocked, %				-	-	-
Mov Cap-1 Maneuver	442	826	1495	-	-	-
Mov Cap-2 Maneuver	442	-	-	-	-	-
Stage 1	765	-	-	-	-	-
Stage 2	704	-	-	-	-	-

Approach	EB	NB	SB
HCM Control Delay, s	25.7	2.6	0
HCM LOS	D		

Minor Lane/Major Mvmt	NBL	NBT	EBLn1	EBLn2	SBT	SBR
Capacity (veh/h)	1495	-	442	826	-	-
HCM Lane V/C Ratio	0.063	-	0.652	0.03	-	-
HCM Control Delay (s)	7.6	0	27.1	9.5	-	-
HCM Lane LOS	A	A	D	A	-	-
HCM 95th %tile Q(veh)	0.2	-	4.5	0.1	-	-

Lane Group	EBL	EBT	WBT	WBR	SBL	SBR
Lane Configurations						
Traffic Volume (vph)	12	264	335	1	24	36
Future Volume (vph)	12	264	335	1	24	36
Ideal Flow (vphpl)	1900	1900	1900	1900	1900	1900
Lane Util. Factor	1.00	1.00	1.00	1.00	1.00	1.00
Frt					0.919	
Flt Protected		0.998			0.980	
Satd. Flow (prot)	0	1859	1863	0	1678	0
Flt Permitted		0.998			0.980	
Satd. Flow (perm)	0	1859	1863	0	1678	0
Link Speed (k/h)		80	80		50	
Link Distance (m)		166.5	310.5		252.9	
Travel Time (s)		7.5	14.0		18.2	
Peak Hour Factor	0.92	0.92	0.92	0.92	0.92	0.92
Adj. Flow (vph)	13	287	364	1	26	39
Shared Lane Traffic (%)						
Lane Group Flow (vph)	0	300	365	0	65	0
Sign Control		Free	Free		Stop	

Intersection Summary			
Area Type:	Other		
Control Type: Unsignalized			
Intersection Capacity Utilization 33.9%		ICU Level of Service A	
Analysis Period (min) 15			

Intersection	
Int Delay, s/veh	1.2

Movement	EBL	EBT	WBT	WBR	SBL	SBR
Lane Configurations						
Traffic Vol, veh/h	12	264	335	1	24	36
Future Vol, veh/h	12	264	335	1	24	36
Conflicting Peds, #/hr	0	0	0	0	0	0
Sign Control	Free	Free	Free	Free	Stop	Stop
RT Channelized	-	None	-	None	-	None
Storage Length	-	-	-	-	0	-
Veh in Median Storage, #	-	0	0	-	0	-
Grade, %	-	0	0	-	0	-
Peak Hour Factor	92	92	92	92	92	92
Heavy Vehicles, %	2	2	2	2	2	2
Mvmt Flow	13	287	364	1	26	39

Major/Minor	Major1		Major2		Minor2	
Conflicting Flow All	365	0	-	0	678	365
Stage 1	-	-	-	-	365	-
Stage 2	-	-	-	-	313	-
Critical Hdwy	4.12	-	-	-	6.42	6.22
Critical Hdwy Stg 1	-	-	-	-	5.42	-
Critical Hdwy Stg 2	-	-	-	-	5.42	-
Follow-up Hdwy	2.218	-	-	-	3.518	3.318
Pot Cap-1 Maneuver	1194	-	-	-	418	680
Stage 1	-	-	-	-	702	-
Stage 2	-	-	-	-	741	-
Platoon blocked, %		-	-	-		
Mov Cap-1 Maneuver	1194	-	-	-	413	680
Mov Cap-2 Maneuver	-	-	-	-	413	-
Stage 1	-	-	-	-	693	-
Stage 2	-	-	-	-	741	-

Approach	EB	WB	SB
HCM Control Delay, s	0.3	0	12.6
HCM LOS			B

Minor Lane/Major Mvmt	EBL	EBT	WBT	WBR	SBLn1
Capacity (veh/h)	1194	-	-	-	540
HCM Lane V/C Ratio	0.011	-	-	-	0.121
HCM Control Delay (s)	8	0	-	-	12.6
HCM Lane LOS	A	A	-	-	B
HCM 95th %tile Q(veh)	0	-	-	-	0.4

Lane Group	EBT	EBR	WBL	WBT	NBL	NBR
Lane Configurations						
Traffic Volume (vph)	27	13	157	213	0	54
Future Volume (vph)	27	13	157	213	0	54
Ideal Flow (vphpl)	1900	1900	1900	1900	1900	1900
Lane Util. Factor	1.00	1.00	1.00	1.00	1.00	1.00
Frt	0.956				0.865	
Flt Protected				0.979		
Satd. Flow (prot)	1781	0	0	1824	1611	0
Flt Permitted				0.979		
Satd. Flow (perm)	1781	0	0	1824	1611	0
Link Speed (k/h)	50			50	50	
Link Distance (m)	150.6			119.9	110.4	
Travel Time (s)	10.8			8.6	7.9	
Peak Hour Factor	0.92	0.92	0.92	0.92	0.92	0.92
Adj. Flow (vph)	29	14	171	232	0	59
Shared Lane Traffic (%)						
Lane Group Flow (vph)	43	0	0	403	59	0
Sign Control	Free			Free	Stop	

Intersection Summary		
Area Type:	Other	
Control Type: Unsignalized		
Intersection Capacity Utilization 36.6%		ICU Level of Service A
Analysis Period (min) 15		

Intersection	
Int Delay, s/veh	3.6

Movement	EBT	EBR	WBL	WBT	NBL	NBR
Lane Configurations						
Traffic Vol, veh/h	27	13	157	213	0	54
Future Vol, veh/h	27	13	157	213	0	54
Conflicting Peds, #/hr	0	0	0	0	0	0
Sign Control	Free	Free	Free	Free	Stop	Stop
RT Channelized	-	None	-	None	-	None
Storage Length	-	-	-	-	0	-
Veh in Median Storage, #	0	-	-	0	0	-
Grade, %	0	-	-	0	0	-
Peak Hour Factor	92	92	92	92	92	92
Heavy Vehicles, %	2	2	2	2	2	2
Mvmt Flow	29	14	171	232	0	59

Major/Minor	Major1		Major2		Minor1	
Conflicting Flow All	0	0	43	0	610	36
Stage 1	-	-	-	-	36	-
Stage 2	-	-	-	-	574	-
Critical Hdwy	-	-	4.12	-	6.42	6.22
Critical Hdwy Stg 1	-	-	-	-	5.42	-
Critical Hdwy Stg 2	-	-	-	-	5.42	-
Follow-up Hdwy	-	-	2.218	-	3.518	3.318
Pot Cap-1 Maneuver	-	-	1566	-	458	1037
Stage 1	-	-	-	-	986	-
Stage 2	-	-	-	-	563	-
Platoon blocked, %	-	-		-		
Mov Cap-1 Maneuver	-	-	1566	-	401	1037
Mov Cap-2 Maneuver	-	-	-	-	401	-
Stage 1	-	-	-	-	986	-
Stage 2	-	-	-	-	493	-

Approach	EB	WB	NB
HCM Control Delay, s	0	3.2	8.7
HCM LOS			A

Minor Lane/Major Mvmt	NBLn1	EBT	EBR	WBL	WBT
Capacity (veh/h)	1037	-	-	1566	-
HCM Lane V/C Ratio	0.057	-	-	0.109	-
HCM Control Delay (s)	8.7	-	-	7.6	0
HCM Lane LOS	A	-	-	A	A
HCM 95th %tile Q(veh)	0.2	-	-	0.4	-

Lane Group	EBT	EBR	WBL	WBT	NBL	NBR
Lane Configurations						
Traffic Volume (vph)	81	0	84	370	0	100
Future Volume (vph)	81	0	84	370	0	100
Ideal Flow (vphpl)	1900	1900	1900	1900	1900	1900
Lane Util. Factor	1.00	1.00	1.00	1.00	1.00	1.00
Frt					0.865	
Flt Protected				0.991		
Satd. Flow (prot)	1863	0	0	1846	1611	0
Flt Permitted				0.991		
Satd. Flow (perm)	1863	0	0	1846	1611	0
Link Speed (k/h)	50			50	50	
Link Distance (m)	119.9			127.6	107.7	
Travel Time (s)	8.6			9.2	7.8	
Peak Hour Factor	0.92	0.92	0.92	0.92	0.92	0.92
Adj. Flow (vph)	88	0	91	402	0	109
Shared Lane Traffic (%)						
Lane Group Flow (vph)	88	0	0	493	109	0
Sign Control	Free			Free	Stop	

Intersection Summary		
Area Type:	Other	
Control Type: Unsignalized		
Intersection Capacity Utilization 43.6%		ICU Level of Service A
Analysis Period (min) 15		

Intersection	
Int Delay, s/veh	2.4

Movement	EBT	EBR	WBL	WBT	NBL	NBR
Lane Configurations						
Traffic Vol, veh/h	81	0	84	370	0	100
Future Vol, veh/h	81	0	84	370	0	100
Conflicting Peds, #/hr	0	0	0	0	0	0
Sign Control	Free	Free	Free	Free	Stop	Stop
RT Channelized	-	None	-	None	-	None
Storage Length	-	-	-	-	0	-
Veh in Median Storage, #	0	-	-	0	0	-
Grade, %	0	-	-	0	0	-
Peak Hour Factor	92	92	92	92	92	92
Heavy Vehicles, %	2	2	2	2	2	2
Mvmt Flow	88	0	91	402	0	109

Major/Minor	Major1		Major2		Minor1	
Conflicting Flow All	0	0	88	0	672	88
Stage 1	-	-	-	-	88	-
Stage 2	-	-	-	-	584	-
Critical Hdwy	-	-	4.12	-	6.42	6.22
Critical Hdwy Stg 1	-	-	-	-	5.42	-
Critical Hdwy Stg 2	-	-	-	-	5.42	-
Follow-up Hdwy	-	-	2.218	-	3.518	3.318
Pot Cap-1 Maneuver	-	-	1508	-	421	970
Stage 1	-	-	-	-	935	-
Stage 2	-	-	-	-	557	-
Platoon blocked, %	-	-		-		
Mov Cap-1 Maneuver	-	-	1508	-	388	970
Mov Cap-2 Maneuver	-	-	-	-	388	-
Stage 1	-	-	-	-	935	-
Stage 2	-	-	-	-	514	-

Approach	EB	WB	NB
HCM Control Delay, s	0	1.4	9.2
HCM LOS			A

Minor Lane/Major Mvmt	NBLn1	EBT	EBR	WBL	WBT
Capacity (veh/h)	970	-	-	1508	-
HCM Lane V/C Ratio	0.112	-	-	0.061	-
HCM Control Delay (s)	9.2	-	-	7.5	0
HCM Lane LOS	A	-	-	A	A
HCM 95th %tile Q(veh)	0.4	-	-	0.2	-

Lane Group	EBT	EBR	WBL	WBT	NBL	NBR
Lane Configurations						
Traffic Volume (vph)	454	33	0	394	0	84
Future Volume (vph)	454	33	0	394	0	84
Ideal Flow (vphpl)	1900	1900	1900	1900	1900	1900
Lane Util. Factor	1.00	1.00	1.00	1.00	1.00	1.00
Frt	0.991					0.865
Flt Protected						
Satd. Flow (prot)	1846	0	0	1863	0	1611
Flt Permitted						
Satd. Flow (perm)	1846	0	0	1863	0	1611
Link Speed (k/h)	50			50	50	
Link Distance (m)	197.3			405.7	303.8	
Travel Time (s)	14.2			29.2	21.9	
Peak Hour Factor	0.92	0.92	0.92	0.92	0.92	0.92
Adj. Flow (vph)	493	36	0	428	0	91
Shared Lane Traffic (%)						
Lane Group Flow (vph)	529	0	0	428	0	91
Sign Control	Free			Free	Stop	

Intersection Summary	
Area Type:	Other
Control Type: Unsignalized	
Intersection Capacity Utilization 37.8%	ICU Level of Service A
Analysis Period (min) 15	

Intersection	
Int Delay, s/veh	1.1

Movement	EBT	EBR	WBL	WBT	NBL	NBR
Lane Configurations						
Traffic Vol, veh/h	454	33	0	394	0	84
Future Vol, veh/h	454	33	0	394	0	84
Conflicting Peds, #/hr	0	0	0	0	0	0
Sign Control	Free	Free	Free	Free	Stop	Stop
RT Channelized	-	None	-	None	-	None
Storage Length	-	-	-	-	-	0
Veh in Median Storage, #	0	-	-	0	0	-
Grade, %	0	-	-	0	0	-
Peak Hour Factor	92	92	92	92	92	92
Heavy Vehicles, %	2	2	2	2	2	2
Mvmt Flow	493	36	0	428	0	91

Major/Minor	Major1		Major2		Minor1	
Conflicting Flow All	0	0	-	-	-	511
Stage 1	-	-	-	-	-	-
Stage 2	-	-	-	-	-	-
Critical Hdwy	-	-	-	-	-	6.22
Critical Hdwy Stg 1	-	-	-	-	-	-
Critical Hdwy Stg 2	-	-	-	-	-	-
Follow-up Hdwy	-	-	-	-	-	3.318
Pot Cap-1 Maneuver	-	-	0	-	0	563
Stage 1	-	-	0	-	0	-
Stage 2	-	-	0	-	0	-
Platoon blocked, %	-	-		-		
Mov Cap-1 Maneuver	-	-	-	-	-	563
Mov Cap-2 Maneuver	-	-	-	-	-	-
Stage 1	-	-	-	-	-	-
Stage 2	-	-	-	-	-	-

Approach	EB	WB	NB
HCM Control Delay, s	0	0	12.6
HCM LOS			B

Minor Lane/Major Mvmt	NBLn1	EBT	EBR	WBT
Capacity (veh/h)	563	-	-	-
HCM Lane V/C Ratio	0.162	-	-	-
HCM Control Delay (s)	12.6	-	-	-
HCM Lane LOS	B	-	-	-
HCM 95th %tile Q(veh)	0.6	-	-	-

Lane Group	EBL	EBT	EBR	WBL	WBT	WBR	NBL	NBT	NBR	SBL	SBT	SBR
Lane Configurations												
Traffic Volume (vph)	32	423	83	133	265	58	72	140	161	48	140	57
Future Volume (vph)	32	423	83	133	265	58	72	140	161	48	140	57
Ideal Flow (vphpl)	1900	1900	1900	1900	1900	1900	1900	1900	1900	1900	1900	1900
Storage Length (m)	70.0		70.0	120.0		0.0	55.0		0.0	55.0		0.0
Storage Lanes	1		1	1		0	1		0	1		0
Taper Length (m)	100.0			100.0			100.0			100.0		
Lane Util. Factor	1.00	1.00	1.00	1.00	1.00	1.00	1.00	1.00	1.00	1.00	1.00	1.00
Frt			0.850		0.973			0.920			0.957	
Flt Protected	0.950			0.950			0.950			0.950		
Satd. Flow (prot)	1626	1863	1615	1719	1686	0	1736	1620	0	1687	1752	0
Flt Permitted	0.551			0.330			0.600			0.401		
Satd. Flow (perm)	943	1863	1615	597	1686	0	1096	1620	0	712	1752	0
Right Turn on Red			Yes			Yes			Yes			Yes
Satd. Flow (RTOR)			90		18			59			21	
Link Speed (k/h)		50			50			80			50	
Link Distance (m)		405.7			474.4			304.1			233.9	
Travel Time (s)		29.2			34.2			13.7			16.8	
Peak Hour Factor	0.92	0.92	0.92	0.92	0.92	0.92	0.92	0.92	0.92	0.92	0.92	0.92
Heavy Vehicles (%)	11%	2%	0%	5%	5%	31%	4%	17%	0%	7%	0%	13%
Adj. Flow (vph)	35	460	90	145	288	63	78	152	175	52	152	62
Shared Lane Traffic (%)												
Lane Group Flow (vph)	35	460	90	145	351	0	78	327	0	52	214	0
Turn Type	Perm	NA	Perm	pm+pt	NA		Perm	NA		Perm	NA	
Protected Phases		2		1	6			8			4	
Permitted Phases	2		2	6			8			4		
Detector Phase	2	2	2	1	6		8	8		4	4	
Switch Phase												
Minimum Initial (s)	20.0	20.0	20.0	5.0	20.0		10.0	10.0		10.0	10.0	
Minimum Split (s)	36.0	36.0	36.0	8.0	36.0		29.0	29.0		29.0	29.0	
Total Split (s)	52.0	52.0	52.0	12.0	64.0		36.0	36.0		36.0	36.0	
Total Split (%)	52.0%	52.0%	52.0%	12.0%	64.0%		36.0%	36.0%		36.0%	36.0%	
Maximum Green (s)	45.0	45.0	45.0	9.0	57.0		30.0	30.0		30.0	30.0	
Yellow Time (s)	5.4	5.4	5.4	3.0	5.4		4.1	4.1		4.1	4.1	
All-Red Time (s)	1.6	1.6	1.6	0.0	1.6		1.9	1.9		1.9	1.9	
Lost Time Adjust (s)	0.0	0.0	0.0	0.0	0.0		0.0	0.0		0.0	0.0	
Total Lost Time (s)	7.0	7.0	7.0	3.0	7.0		6.0	6.0		6.0	6.0	
Lead/Lag	Lag	Lag	Lag	Lead								
Lead-Lag Optimize?	Yes	Yes	Yes	Yes								
Vehicle Extension (s)	4.5	4.5	4.5	2.0	4.5		3.0	3.0		3.0	3.0	
Recall Mode	Min	Min	Min	None	Min		None	None		None	None	
Walk Time (s)	17.0	17.0	17.0		17.0		12.0	12.0		12.0	12.0	
Flash Dont Walk (s)	12.0	12.0	12.0		12.0		7.0	7.0		7.0	7.0	
Pedestrian Calls (#/hr)	0	0	0		0		0	0		0	0	
Act Effct Green (s)	26.1	26.1	26.1	40.7	36.5		17.3	17.3		17.3	17.3	
Actuated g/C Ratio	0.39	0.39	0.39	0.60	0.54		0.26	0.26		0.26	0.26	
v/c Ratio	0.10	0.64	0.13	0.30	0.38		0.28	0.71		0.29	0.46	
Control Delay	15.8	22.5	4.4	8.5	10.6		24.4	28.7		26.4	23.4	
Queue Delay	0.0	0.0	0.0	0.0	0.0		0.0	0.0		0.0	0.0	

Lane Group	EBL	EBT	EBR	WBL	WBT	WBR	NBL	NBT	NBR	SBL	SBT	SBR
Total Delay	15.8	22.5	4.4	8.5	10.6		24.4	28.7		26.4	23.4	
LOS	B	C	A	A	B		C	C		C	C	
Approach Delay		19.3			10.0			27.9			23.9	
Approach LOS		B			A			C			C	
Queue Length 50th (m)	2.7	45.8	0.0	6.9	21.7		7.6	29.3		5.1	19.6	
Queue Length 95th (m)	10.1	97.0	8.7	19.9	52.6		22.6	71.4		17.3	48.3	
Internal Link Dist (m)		381.7			450.4			280.1			209.9	
Turn Bay Length (m)	70.0		70.0	120.0			55.0			55.0		
Base Capacity (vph)	659	1302	1156	517	1445		510	786		331	827	
Starvation Cap Reductn	0	0	0	0	0		0	0		0	0	
Spillback Cap Reductn	0	0	0	0	0		0	0		0	0	
Storage Cap Reductn	0	0	0	0	0		0	0		0	0	
Reduced v/c Ratio	0.05	0.35	0.08	0.28	0.24		0.15	0.42		0.16	0.26	

Intersection Summary			
Area Type:	Other		
Cycle Length: 100			
Actuated Cycle Length: 67.4			
Natural Cycle: 75			
Control Type: Semi Act-Uncoord			
Maximum v/c Ratio: 0.71			
Intersection Signal Delay: 19.4		Intersection LOS: B	
Intersection Capacity Utilization 81.4%		ICU Level of Service D	
Analysis Period (min) 15			

Splits and Phases: 2: 28th Avenue & 16th Street

Movement	EBL	EBT	EBR	WBL	WBT	WBR	NBL	NBT	NBR	SBL	SBT	SBR
Lane Configurations												
Traffic Volume (veh/h)	32	423	83	133	265	58	72	140	161	48	140	57
Future Volume (veh/h)	32	423	83	133	265	58	72	140	161	48	140	57
Initial Q (Qb), veh	0	0	0	0	0	0	0	0	0	0	0	0
Ped-Bike Adj(A_pbT)	1.00		1.00	1.00		1.00	1.00		1.00	1.00		1.00
Parking Bus, Adj	1.00	1.00	1.00	1.00	1.00	1.00	1.00	1.00	1.00	1.00	1.00	1.00
Work Zone On Approach		No			No			No			No	
Adj Sat Flow, veh/h/ln	1737	1870	1900	1826	1826	1441	1841	1648	1900	1796	1900	1707
Adj Flow Rate, veh/h	35	460	90	145	288	63	78	152	175	52	152	62
Peak Hour Factor	0.92	0.92	0.92	0.92	0.92	0.92	0.92	0.92	0.92	0.92	0.92	0.92
Percent Heavy Veh, %	11	2	0	5	5	31	4	17	0	7	0	13
Cap, veh/h	464	680	585	380	709	155	353	209	241	223	384	157
Arrive On Green	0.36	0.36	0.36	0.08	0.49	0.49	0.30	0.30	0.30	0.30	0.30	0.30
Sat Flow, veh/h	957	1870	1610	1739	1451	317	1149	699	804	1011	1283	523
Grp Volume(v), veh/h	35	460	90	145	0	351	78	0	327	52	0	214
Grp Sat Flow(s),veh/h/ln	957	1870	1610	1739	0	1769	1149	0	1503	1011	0	1806
Q Serve(g_s), s	1.5	12.7	2.3	2.9	0.0	7.7	3.5	0.0	11.9	3.0	0.0	5.8
Cycle Q Clear(g_c), s	1.6	12.7	2.3	2.9	0.0	7.7	9.3	0.0	11.9	14.9	0.0	5.8
Prop In Lane	1.00		1.00	1.00		0.18	1.00		0.54	1.00		0.29
Lane Grp Cap(c), veh/h	464	680	585	380	0	864	353	0	450	223	0	540
V/C Ratio(X)	0.08	0.68	0.15	0.38	0.00	0.41	0.22	0.00	0.73	0.23	0.00	0.40
Avail Cap(c_a), veh/h	820	1376	1185	504	0	1648	573	0	737	417	0	886
HCM Platoon Ratio	1.00	1.00	1.00	1.00	1.00	1.00	1.00	1.00	1.00	1.00	1.00	1.00
Upstream Filter(I)	1.00	1.00	1.00	1.00	0.00	1.00	1.00	0.00	1.00	1.00	0.00	1.00
Uniform Delay (d), s/veh	12.9	16.4	13.1	11.4	0.0	10.0	20.7	0.0	19.2	25.9	0.0	17.0
Incr Delay (d2), s/veh	0.1	2.0	0.2	0.2	0.0	0.5	0.3	0.0	2.3	0.5	0.0	0.5
Initial Q Delay(d3),s/veh	0.0	0.0	0.0	0.0	0.0	0.0	0.0	0.0	0.0	0.0	0.0	0.0
%ile BackOfQ(50%),veh/ln	0.0	0.5	0.1	0.0	0.0	0.1	0.2	0.0	0.5	0.3	0.0	0.4
Unsig. Movement Delay, s/veh												
LnGrp Delay(d),s/veh	13.1	18.4	13.3	11.7	0.0	10.5	21.0	0.0	21.5	26.4	0.0	17.5
LnGrp LOS	B	B	B	B	A	B	C	A	C	C	A	B
Approach Vol, veh/h		585			496			405			266	
Approach Delay, s/veh		17.3			10.9			21.4			19.2	
Approach LOS		B			B			C			B	

Timer - Assigned Phs	1	2		4		6		8
Phs Duration (G+Y+Rc), s	7.6	29.2		24.3		36.9		24.3
Change Period (Y+Rc), s	3.0	* 7		* 6		* 7		* 6
Max Green Setting (Gmax), s	9.0	* 45		* 30		* 57		* 30
Max Q Clear Time (g_c+I1), s	4.9	14.7		16.9		9.7		13.9
Green Ext Time (p_c), s	0.1	7.5		1.4		5.0		2.6

Intersection Summary		
HCM 6th Ctrl Delay		16.7
HCM 6th LOS		B

Notes

* HCM 6th computational engine requires equal clearance times for the phases crossing the barrier.

Lane Group	EBL	EBR	NBL	NBT	SBT	SBR
Lane Configurations						
Traffic Volume (vph)	101	268	129	272	297	62
Future Volume (vph)	101	268	129	272	297	62
Ideal Flow (vphpl)	1900	1900	1900	1900	1900	1900
Storage Length (m)	0.0	0.0	40.0			15.0
Storage Lanes	1	1	1			1
Taper Length (m)	7.5		7.5			
Lane Util. Factor	1.00	1.00	1.00	1.00	1.00	1.00
Frt		0.850				0.850
Flt Protected	0.950		0.950			
Satd. Flow (prot)	1770	1583	1770	1863	1863	1583
Flt Permitted	0.950		0.950			
Satd. Flow (perm)	1770	1583	1770	1863	1863	1583
Link Speed (k/h)	50			80	80	
Link Distance (m)	127.6			298.9	304.1	
Travel Time (s)	9.2			13.5	13.7	
Peak Hour Factor	0.92	0.92	0.92	0.92	0.92	0.92
Adj. Flow (vph)	110	291	140	296	323	67
Shared Lane Traffic (%)						
Lane Group Flow (vph)	110	291	140	296	323	67
Sign Control	Stop			Free	Free	

Intersection Summary		
Area Type:	Other	
Control Type: Unsignalized		
Intersection Capacity Utilization 38.9%		ICU Level of Service A
Analysis Period (min) 15		

Intersection	
Int Delay, s/veh	6.5

Movement	EBL	EBR	NBL	NBT	SBT	SBR
Lane Configurations						
Traffic Vol, veh/h	101	268	129	272	297	62
Future Vol, veh/h	101	268	129	272	297	62
Conflicting Peds, #/hr	0	0	0	0	0	0
Sign Control	Stop	Stop	Free	Free	Free	Free
RT Channelized	-	None	-	None	-	None
Storage Length	0	0	40	-	-	15
Veh in Median Storage, #	0	-	-	0	0	-
Grade, %	0	-	-	0	0	-
Peak Hour Factor	92	92	92	92	92	92
Heavy Vehicles, %	2	2	2	2	2	2
Mvmt Flow	110	291	140	296	323	67

Major/Minor	Minor2		Major1		Major2	
Conflicting Flow All	899	323	390	0	-	0
Stage 1	323	-	-	-	-	-
Stage 2	576	-	-	-	-	-
Critical Hdwy	6.42	6.22	4.12	-	-	-
Critical Hdwy Stg 1	5.42	-	-	-	-	-
Critical Hdwy Stg 2	5.42	-	-	-	-	-
Follow-up Hdwy	3.518	3.318	2.218	-	-	-
Pot Cap-1 Maneuver	309	718	1169	-	-	-
Stage 1	734	-	-	-	-	-
Stage 2	562	-	-	-	-	-
Platoon blocked, %				-	-	-
Mov Cap-1 Maneuver	272	718	1169	-	-	-
Mov Cap-2 Maneuver	272	-	-	-	-	-
Stage 1	646	-	-	-	-	-
Stage 2	562	-	-	-	-	-

Approach	EB	NB	SB
HCM Control Delay, s	17.1	2.7	0
HCM LOS	C		

Minor Lane/Major Mvmt	NBL	NBT	EBLn1	EBLn2	SBT	SBR
Capacity (veh/h)	1169	-	272	718	-	-
HCM Lane V/C Ratio	0.12	-	0.404	0.406	-	-
HCM Control Delay (s)	8.5	-	26.9	13.4	-	-
HCM Lane LOS	A	-	D	B	-	-
HCM 95th %tile Q(veh)	0.4	-	1.9	2	-	-

Lane Group	EBL	EBR	NBL	NBT	SBT	SBR
Lane Configurations						
Traffic Volume (vph)	51	2	3	350	466	99
Future Volume (vph)	51	2	3	350	466	99
Ideal Flow (vphpl)	1900	1900	1900	1900	1900	1900
Lane Util. Factor	1.00	1.00	1.00	1.00	1.00	1.00
Frt	0.995				0.976	
Flt Protected	0.954					
Satd. Flow (prot)	1768	0	0	1863	1818	0
Flt Permitted	0.954					
Satd. Flow (perm)	1768	0	0	1863	1818	0
Link Speed (k/h)	50			80	80	
Link Distance (m)	308.0			256.5	298.9	
Travel Time (s)	22.2			11.5	13.5	
Peak Hour Factor	0.92	0.92	0.92	0.92	0.92	0.92
Adj. Flow (vph)	55	2	3	380	507	108
Shared Lane Traffic (%)						
Lane Group Flow (vph)	57	0	0	383	615	0
Sign Control	Stop			Free	Free	

Intersection Summary			
Area Type:	Other		
Control Type: Unsignalized			
Intersection Capacity Utilization 40.5%		ICU Level of Service A	
Analysis Period (min) 15			

Intersection	
Int Delay, s/veh	1.1

Movement	EBL	EBR	NBL	NBT	SBT	SBR
Lane Configurations						
Traffic Vol, veh/h	51	2	3	350	466	99
Future Vol, veh/h	51	2	3	350	466	99
Conflicting Peds, #/hr	0	0	0	0	0	0
Sign Control	Stop	Stop	Free	Free	Free	Free
RT Channelized	-	None	-	None	-	None
Storage Length	0	-	-	-	-	-
Veh in Median Storage, #	0	-	-	0	0	-
Grade, %	0	-	-	0	0	-
Peak Hour Factor	92	92	92	92	92	92
Heavy Vehicles, %	2	2	2	2	2	2
Mvmt Flow	55	2	3	380	507	108

Major/Minor	Minor2		Major1		Major2	
Conflicting Flow All	947	561	615	0	-	0
Stage 1	561	-	-	-	-	-
Stage 2	386	-	-	-	-	-
Critical Hdwy	6.42	6.22	4.12	-	-	-
Critical Hdwy Stg 1	5.42	-	-	-	-	-
Critical Hdwy Stg 2	5.42	-	-	-	-	-
Follow-up Hdwy	3.518	3.318	2.218	-	-	-
Pot Cap-1 Maneuver	290	527	965	-	-	-
Stage 1	571	-	-	-	-	-
Stage 2	687	-	-	-	-	-
Platoon blocked, %				-	-	-
Mov Cap-1 Maneuver	289	527	965	-	-	-
Mov Cap-2 Maneuver	289	-	-	-	-	-
Stage 1	569	-	-	-	-	-
Stage 2	687	-	-	-	-	-

Approach	EB	NB	SB
HCM Control Delay, s	20.2	0.1	0
HCM LOS	C		

Minor Lane/Major Mvmt	NBL	NBT	EBLn1	SBT	SBR
Capacity (veh/h)	965	-	294	-	-
HCM Lane V/C Ratio	0.003	-	0.196	-	-
HCM Control Delay (s)	8.7	0	20.2	-	-
HCM Lane LOS	A	A	C	-	-
HCM 95th %tile Q(veh)	0	-	0.7	-	-

Lane Group	EBL	EBR	NBL	NBT	SBT	SBR
Lane Configurations						
Traffic Volume (vph)	257	53	31	95	180	287
Future Volume (vph)	257	53	31	95	180	287
Ideal Flow (vphpl)	1900	1900	1900	1900	1900	1900
Storage Length (m)	0.0	20.0	0.0			0.0
Storage Lanes	1	1	0			0
Taper Length (m)	7.5		7.5			
Lane Util. Factor	1.00	1.00	1.00	1.00	1.00	1.00
Frt		0.850			0.917	
Flt Protected	0.950			0.988		
Satd. Flow (prot)	1805	1615	0	1698	1718	0
Flt Permitted	0.950			0.988		
Satd. Flow (perm)	1805	1615	0	1698	1718	0
Link Speed (k/h)	80			60	80	
Link Distance (m)	310.5			265.1	256.5	
Travel Time (s)	14.0			15.9	11.5	
Peak Hour Factor	0.92	0.92	0.92	0.92	0.92	0.92
Heavy Vehicles (%)	0%	0%	0%	14%	2%	1%
Adj. Flow (vph)	279	58	34	103	196	312
Shared Lane Traffic (%)						
Lane Group Flow (vph)	279	58	0	137	508	0
Sign Control	Stop			Free	Free	

Intersection Summary			
Area Type:	Other		
Control Type: Unsignalized			
Intersection Capacity Utilization 53.0%			ICU Level of Service A
Analysis Period (min) 15			

Intersection	
Int Delay, s/veh	6.8

Movement	EBL	EBR	NBL	NBT	SBT	SBR
Lane Configurations						
Traffic Vol, veh/h	257	53	31	95	180	287
Future Vol, veh/h	257	53	31	95	180	287
Conflicting Peds, #/hr	0	0	0	0	0	0
Sign Control	Stop	Stop	Free	Free	Free	Free
RT Channelized	-	None	-	None	-	Yield
Storage Length	0	20	-	-	-	-
Veh in Median Storage, #	0	-	-	0	0	-
Grade, %	0	-	-	0	0	-
Peak Hour Factor	92	92	92	92	92	92
Heavy Vehicles, %	0	0	0	14	2	1
Mvmt Flow	279	58	34	103	196	312

Major/Minor	Minor2		Major1		Major2	
Conflicting Flow All	523	352	196	0	-	0
Stage 1	352	-	-	-	-	-
Stage 2	171	-	-	-	-	-
Critical Hdwy	6.4	6.2	4.1	-	-	-
Critical Hdwy Stg 1	5.4	-	-	-	-	-
Critical Hdwy Stg 2	5.4	-	-	-	-	-
Follow-up Hdwy	3.5	3.3	2.2	-	-	-
Pot Cap-1 Maneuver	518	696	1389	-	-	-
Stage 1	716	-	-	-	-	-
Stage 2	864	-	-	-	-	-
Platoon blocked, %				-	-	-
Mov Cap-1 Maneuver	505	696	1389	-	-	-
Mov Cap-2 Maneuver	505	-	-	-	-	-
Stage 1	697	-	-	-	-	-
Stage 2	864	-	-	-	-	-

Approach	EB	NB	SB
HCM Control Delay, s	18.9	1.9	0
HCM LOS	C		

Minor Lane/Major Mvmt	NBL	NBT	EBLn1	EBLn2	SBT	SBR
Capacity (veh/h)	1389	-	505	696	-	-
HCM Lane V/C Ratio	0.024	-	0.553	0.083	-	-
HCM Control Delay (s)	7.7	0	20.6	10.6	-	-
HCM Lane LOS	A	A	C	B	-	-
HCM 95th %tile Q(veh)	0.1	-	3.3	0.3	-	-

Lane Group	EBL	EBT	WBT	WBR	SBL	SBR
Lane Configurations						
Traffic Volume (vph)	35	295	315	4	16	22
Future Volume (vph)	35	295	315	4	16	22
Ideal Flow (vphpl)	1900	1900	1900	1900	1900	1900
Lane Util. Factor	1.00	1.00	1.00	1.00	1.00	1.00
Frt			0.998		0.921	
Flt Protected		0.995			0.980	
Satd. Flow (prot)	0	1853	1859	0	1681	0
Flt Permitted		0.995			0.980	
Satd. Flow (perm)	0	1853	1859	0	1681	0
Link Speed (k/h)		80	80		50	
Link Distance (m)		166.5	310.5		252.9	
Travel Time (s)		7.5	14.0		18.2	
Peak Hour Factor	0.92	0.92	0.92	0.92	0.92	0.92
Adj. Flow (vph)	38	321	342	4	17	24
Shared Lane Traffic (%)						
Lane Group Flow (vph)	0	359	346	0	41	0
Sign Control		Free	Free		Stop	

Intersection Summary			
Area Type:	Other		
Control Type: Unsignalized			
Intersection Capacity Utilization 47.6%		ICU Level of Service A	
Analysis Period (min) 15			

Intersection	
Int Delay, s/veh	1.1

Movement	EBL	EBT	WBT	WBR	SBL	SBR
Lane Configurations						
Traffic Vol, veh/h	35	295	315	4	16	22
Future Vol, veh/h	35	295	315	4	16	22
Conflicting Peds, #/hr	0	0	0	0	0	0
Sign Control	Free	Free	Free	Free	Stop	Stop
RT Channelized	-	None	-	None	-	None
Storage Length	-	-	-	-	0	-
Veh in Median Storage, #	-	0	0	-	0	-
Grade, %	-	0	0	-	0	-
Peak Hour Factor	92	92	92	92	92	92
Heavy Vehicles, %	2	2	2	2	2	2
Mvmt Flow	38	321	342	4	17	24

Major/Minor	Major1		Major2		Minor2	
Conflicting Flow All	346	0	-	0	741	344
Stage 1	-	-	-	-	344	-
Stage 2	-	-	-	-	397	-
Critical Hdwy	4.12	-	-	-	6.42	6.22
Critical Hdwy Stg 1	-	-	-	-	5.42	-
Critical Hdwy Stg 2	-	-	-	-	5.42	-
Follow-up Hdwy	2.218	-	-	-	3.518	3.318
Pot Cap-1 Maneuver	1213	-	-	-	384	699
Stage 1	-	-	-	-	718	-
Stage 2	-	-	-	-	679	-
Platoon blocked, %		-	-	-		
Mov Cap-1 Maneuver	1213	-	-	-	369	699
Mov Cap-2 Maneuver	-	-	-	-	369	-
Stage 1	-	-	-	-	691	-
Stage 2	-	-	-	-	679	-

Approach	EB	WB	SB
HCM Control Delay, s	0.9	0	12.7
HCM LOS			B

Minor Lane/Major Mvmt	EBL	EBT	WBT	WBR	SBLn1
Capacity (veh/h)	1213	-	-	-	508
HCM Lane V/C Ratio	0.031	-	-	-	0.081
HCM Control Delay (s)	8.1	0	-	-	12.7
HCM Lane LOS	A	A	-	-	B
HCM 95th %tile Q(veh)	0.1	-	-	-	0.3

Lane Group	EBT	EBR	WBL	WBT	NBL	NBR
Lane Configurations						
Traffic Volume (vph)	115	8	95	45	0	102
Future Volume (vph)	115	8	95	45	0	102
Ideal Flow (vphpl)	1900	1900	1900	1900	1900	1900
Lane Util. Factor	1.00	1.00	1.00	1.00	1.00	1.00
Frt	0.991				0.865	
Flt Protected				0.967		
Satd. Flow (prot)	1846	0	0	1801	1611	0
Flt Permitted				0.967		
Satd. Flow (perm)	1846	0	0	1801	1611	0
Link Speed (k/h)	50			50	50	
Link Distance (m)	150.6			119.9	110.4	
Travel Time (s)	10.8			8.6	7.9	
Peak Hour Factor	0.92	0.92	0.92	0.92	0.92	0.92
Adj. Flow (vph)	125	9	103	49	0	111
Shared Lane Traffic (%)						
Lane Group Flow (vph)	134	0	0	152	111	0
Sign Control	Free			Free	Stop	

Intersection Summary		
Area Type:	Other	
Control Type: Unsignalized		
Intersection Capacity Utilization 30.5%		ICU Level of Service A
Analysis Period (min) 15		

Intersection	
Int Delay, s/veh	4.6

Movement	EBT	EBR	WBL	WBT	NBL	NBR
Lane Configurations						
Traffic Vol, veh/h	115	8	95	45	0	102
Future Vol, veh/h	115	8	95	45	0	102
Conflicting Peds, #/hr	0	0	0	0	0	0
Sign Control	Free	Free	Free	Free	Stop	Stop
RT Channelized	-	None	-	None	-	None
Storage Length	-	-	-	-	0	-
Veh in Median Storage, #	0	-	-	0	0	-
Grade, %	0	-	-	0	0	-
Peak Hour Factor	92	92	92	92	92	92
Heavy Vehicles, %	2	2	2	2	2	2
Mvmt Flow	125	9	103	49	0	111

Major/Minor	Major1		Major2		Minor1	
Conflicting Flow All	0	0	134	0	385	130
Stage 1	-	-	-	-	130	-
Stage 2	-	-	-	-	255	-
Critical Hdwy	-	-	4.12	-	6.42	6.22
Critical Hdwy Stg 1	-	-	-	-	5.42	-
Critical Hdwy Stg 2	-	-	-	-	5.42	-
Follow-up Hdwy	-	-	2.218	-	3.518	3.318
Pot Cap-1 Maneuver	-	-	1451	-	618	920
Stage 1	-	-	-	-	896	-
Stage 2	-	-	-	-	788	-
Platoon blocked, %	-	-		-		
Mov Cap-1 Maneuver	-	-	1451	-	573	920
Mov Cap-2 Maneuver	-	-	-	-	573	-
Stage 1	-	-	-	-	896	-
Stage 2	-	-	-	-	730	-

Approach	EB	WB	NB
HCM Control Delay, s	0	5.2	9.4
HCM LOS			A

Minor Lane/Major Mvmt	NBLn1	EBT	EBR	WBL	WBT
Capacity (veh/h)	920	-	-	1451	-
HCM Lane V/C Ratio	0.121	-	-	0.071	-
HCM Control Delay (s)	9.4	-	-	7.7	0
HCM Lane LOS	A	-	-	A	A
HCM 95th %tile Q(veh)	0.4	-	-	0.2	-

Lane Group	EBT	EBR	WBL	WBT	NBL	NBR
Lane Configurations						
Traffic Volume (vph)	217	0	51	140	0	152
Future Volume (vph)	217	0	51	140	0	152
Ideal Flow (vphpl)	1900	1900	1900	1900	1900	1900
Lane Util. Factor	1.00	1.00	1.00	1.00	1.00	1.00
Frt					0.865	
Flt Protected				0.987		
Satd. Flow (prot)	1863	0	0	1839	1611	0
Flt Permitted				0.987		
Satd. Flow (perm)	1863	0	0	1839	1611	0
Link Speed (k/h)	50			50	50	
Link Distance (m)	119.9			127.6	107.7	
Travel Time (s)	8.6			9.2	7.8	
Peak Hour Factor	0.92	0.92	0.92	0.92	0.92	0.92
Adj. Flow (vph)	236	0	55	152	0	165
Shared Lane Traffic (%)						
Lane Group Flow (vph)	236	0	0	207	165	0
Sign Control	Free			Free	Stop	

Intersection Summary		
Area Type:	Other	
Control Type: Unsignalized		
Intersection Capacity Utilization 41.0%		ICU Level of Service A
Analysis Period (min) 15		

Intersection	
Int Delay, s/veh	3.6

Movement	EBT	EBR	WBL	WBT	NBL	NBR
Lane Configurations						
Traffic Vol, veh/h	217	0	51	140	0	152
Future Vol, veh/h	217	0	51	140	0	152
Conflicting Peds, #/hr	0	0	0	0	0	0
Sign Control	Free	Free	Free	Free	Stop	Stop
RT Channelized	-	None	-	None	-	None
Storage Length	-	-	-	-	0	-
Veh in Median Storage, #	0	-	-	0	0	-
Grade, %	0	-	-	0	0	-
Peak Hour Factor	92	92	92	92	92	92
Heavy Vehicles, %	2	2	2	2	2	2
Mvmt Flow	236	0	55	152	0	165

Major/Minor	Major1		Major2		Minor1	
Conflicting Flow All	0	0	236	0	498	236
Stage 1	-	-	-	-	236	-
Stage 2	-	-	-	-	262	-
Critical Hdwy	-	-	4.12	-	6.42	6.22
Critical Hdwy Stg 1	-	-	-	-	5.42	-
Critical Hdwy Stg 2	-	-	-	-	5.42	-
Follow-up Hdwy	-	-	2.218	-	3.518	3.318
Pot Cap-1 Maneuver	-	-	1331	-	532	803
Stage 1	-	-	-	-	803	-
Stage 2	-	-	-	-	782	-
Platoon blocked, %	-	-		-		
Mov Cap-1 Maneuver	-	-	1331	-	508	803
Mov Cap-2 Maneuver	-	-	-	-	508	-
Stage 1	-	-	-	-	803	-
Stage 2	-	-	-	-	747	-

Approach	EB	WB	NB
HCM Control Delay, s	0	2.1	10.6
HCM LOS			B

Minor Lane/Major Mvmt	NBLn1	EBT	EBR	WBL	WBT
Capacity (veh/h)	803	-	-	1331	-
HCM Lane V/C Ratio	0.206	-	-	0.042	-
HCM Control Delay (s)	10.6	-	-	7.8	0
HCM Lane LOS	B	-	-	A	A
HCM 95th %tile Q(veh)	0.8	-	-	0.1	-

Appendix I

2038 Background Traffic Operations Reports

Lane Group	EBT	EBR	WBL	WBT	NBL	NBR
Lane Configurations						
Traffic Volume (vph)	250	21	0	446	0	25
Future Volume (vph)	250	21	0	446	0	25
Ideal Flow (vphpl)	1900	1900	1900	1900	1900	1900
Lane Util. Factor	1.00	1.00	1.00	1.00	1.00	1.00
Frt	0.989					0.865
Flt Protected						
Satd. Flow (prot)	1842	0	0	1863	0	1611
Flt Permitted						
Satd. Flow (perm)	1842	0	0	1863	0	1611
Link Speed (k/h)	50			50	50	
Link Distance (m)	197.3			405.7	303.8	
Travel Time (s)	14.2			29.2	21.9	
Peak Hour Factor	0.92	0.92	0.92	0.92	0.92	0.92
Adj. Flow (vph)	272	23	0	485	0	27
Shared Lane Traffic (%)						
Lane Group Flow (vph)	295	0	0	485	0	27
Sign Control	Free			Free	Stop	

Intersection Summary	
Area Type:	Other
Control Type: Unsignalized	
Intersection Capacity Utilization 26.8%	ICU Level of Service A
Analysis Period (min) 15	

Intersection	
Int Delay, s/veh	0.3

Movement	EBT	EBR	WBL	WBT	NBL	NBR
Lane Configurations						
Traffic Vol, veh/h	250	21	0	446	0	25
Future Vol, veh/h	250	21	0	446	0	25
Conflicting Peds, #/hr	0	0	0	0	0	0
Sign Control	Free	Free	Free	Free	Stop	Stop
RT Channelized	-	None	-	None	-	None
Storage Length	-	-	-	-	-	0
Veh in Median Storage, #	0	-	-	0	0	-
Grade, %	0	-	-	0	0	-
Peak Hour Factor	92	92	92	92	92	92
Heavy Vehicles, %	2	2	2	2	2	2
Mvmt Flow	272	23	0	485	0	27

Major/Minor	Major1		Major2		Minor1	
Conflicting Flow All	0	0	-	-	-	284
Stage 1	-	-	-	-	-	-
Stage 2	-	-	-	-	-	-
Critical Hdwy	-	-	-	-	-	6.22
Critical Hdwy Stg 1	-	-	-	-	-	-
Critical Hdwy Stg 2	-	-	-	-	-	-
Follow-up Hdwy	-	-	-	-	-	3.318
Pot Cap-1 Maneuver	-	-	0	-	0	755
Stage 1	-	-	0	-	0	-
Stage 2	-	-	0	-	0	-
Platoon blocked, %	-	-		-		
Mov Cap-1 Maneuver	-	-	-	-	-	755
Mov Cap-2 Maneuver	-	-	-	-	-	-
Stage 1	-	-	-	-	-	-
Stage 2	-	-	-	-	-	-

Approach	EB	WB	NB
HCM Control Delay, s	0	0	9.9
HCM LOS			A

Minor Lane/Major Mvmt	NBLn1	EBT	EBR	WBT
Capacity (veh/h)	755	-	-	-
HCM Lane V/C Ratio	0.036	-	-	-
HCM Control Delay (s)	9.9	-	-	-
HCM Lane LOS	A	-	-	-
HCM 95th %tile Q(veh)	0.1	-	-	-

Lane Group	EBL	EBT	EBR	WBL	WBT	WBR	NBL	NBT	NBR	SBL	SBT	SBR
Lane Configurations												
Traffic Volume (vph)	44	197	33	337	311	62	117	160	80	48	118	17
Future Volume (vph)	44	197	33	337	311	62	117	160	80	48	118	17
Ideal Flow (vphpl)	1900	1900	1900	1900	1900	1900	1900	1900	1900	1900	1900	1900
Storage Length (m)	70.0		70.0	120.0		0.0	55.0		0.0	55.0		0.0
Storage Lanes	1		1	1		0	1		0	1		0
Taper Length (m)	100.0			100.0			100.0			100.0		
Lane Util. Factor	1.00	1.00	1.00	1.00	1.00	1.00	1.00	1.00	1.00	1.00	1.00	1.00
Frt			0.850		0.975			0.950			0.982	
Flt Protected	0.950			0.950			0.950			0.950		
Satd. Flow (prot)	1805	1810	1468	1787	1721	0	1641	1714	0	1492	1583	0
Flt Permitted	0.524			0.543			0.664			0.528		
Satd. Flow (perm)	996	1810	1468	1021	1721	0	1147	1714	0	829	1583	0
Right Turn on Red			Yes			Yes			Yes			Yes
Satd. Flow (RTOR)			65		17			26			7	
Link Speed (k/h)		50			50			80			50	
Link Distance (m)		405.7			474.4			304.1			233.9	
Travel Time (s)		29.2			34.2			13.7			16.8	
Peak Hour Factor	0.92	0.92	0.92	0.92	0.92	0.92	0.92	0.92	0.92	0.92	0.92	0.92
Heavy Vehicles (%)	0%	5%	10%	1%	4%	26%	10%	7%	2%	21%	19%	10%
Adj. Flow (vph)	48	214	36	366	338	67	127	174	87	52	128	18
Shared Lane Traffic (%)												
Lane Group Flow (vph)	48	214	36	366	405	0	127	261	0	52	146	0
Turn Type	Perm	NA	Perm	pm+pt	NA		Perm	NA		Perm	NA	
Protected Phases		2		1	6			8			4	
Permitted Phases	2		2	6			8			4		
Detector Phase	2	2	2	1	6		8	8		4	4	
Switch Phase												
Minimum Initial (s)	20.0	20.0	20.0	5.0	20.0		10.0	10.0		10.0	10.0	
Minimum Split (s)	36.0	36.0	36.0	8.0	36.0		29.0	29.0		29.0	29.0	
Total Split (s)	52.0	52.0	52.0	12.0	64.0		36.0	36.0		36.0	36.0	
Total Split (%)	52.0%	52.0%	52.0%	12.0%	64.0%		36.0%	36.0%		36.0%	36.0%	
Maximum Green (s)	45.0	45.0	45.0	9.0	57.0		30.0	30.0		30.0	30.0	
Yellow Time (s)	5.4	5.4	5.4	3.0	5.4		4.1	4.1		4.1	4.1	
All-Red Time (s)	1.6	1.6	1.6	0.0	1.6		1.9	1.9		1.9	1.9	
Lost Time Adjust (s)	0.0	0.0	0.0	0.0	0.0		0.0	0.0		0.0	0.0	
Total Lost Time (s)	7.0	7.0	7.0	3.0	7.0		6.0	6.0		6.0	6.0	
Lead/Lag	Lag	Lag	Lag	Lead								
Lead-Lag Optimize?	Yes	Yes	Yes	Yes								
Vehicle Extension (s)	4.5	4.5	4.5	2.0	4.5		3.0	3.0		3.0	3.0	
Recall Mode	Min	Min	Min	None	Min		None	None		None	None	
Walk Time (s)	17.0	17.0	17.0		17.0		12.0	12.0		12.0	12.0	
Flash Dont Walk (s)	12.0	12.0	12.0		12.0		7.0	7.0		7.0	7.0	
Pedestrian Calls (#/hr)	0	0	0		0		0	0		0	0	
Act Effct Green (s)	20.1	20.1	20.1	35.7	31.7		13.5	13.5		13.5	13.5	
Actuated g/C Ratio	0.35	0.35	0.35	0.61	0.54		0.23	0.23		0.23	0.23	
v/c Ratio	0.14	0.34	0.07	0.49	0.43		0.48	0.63		0.27	0.39	
Control Delay	15.9	17.1	2.4	8.7	9.9		25.9	25.3		22.1	21.2	
Queue Delay	0.0	0.0	0.0	0.0	0.0		0.0	0.0		0.0	0.0	

Lane Group	EBL	EBT	EBR	WBL	WBT	WBR	NBL	NBT	NBR	SBL	SBT	SBR
Total Delay	15.9	17.1	2.4	8.7	9.9		25.9	25.3		22.1	21.2	
LOS	B	B	A	A	A		C	C		C	C	
Approach Delay		15.1			9.3			25.5			21.5	
Approach LOS		B			A			C			C	
Queue Length 50th (m)	3.6	17.3	0.0	16.5	22.4		12.4	23.6		4.8	13.2	
Queue Length 95th (m)	11.5	36.8	2.9	37.2	48.7		26.3	44.0		13.0	26.9	
Internal Link Dist (m)		381.7			450.4			280.1			209.9	
Turn Bay Length (m)	70.0		70.0	120.0			55.0			55.0		
Base Capacity (vph)	772	1403	1153	745	1662		593	898		428	821	
Starvation Cap Reductn	0	0	0	0	0		0	0		0	0	
Spillback Cap Reductn	0	0	0	0	0		0	0		0	0	
Storage Cap Reductn	0	0	0	0	0		0	0		0	0	
Reduced v/c Ratio	0.06	0.15	0.03	0.49	0.24		0.21	0.29		0.12	0.18	

Intersection Summary			
Area Type:	Other		
Cycle Length: 100			
Actuated Cycle Length: 58.2			
Natural Cycle: 75			
Control Type: Semi Act-Uncoord			
Maximum v/c Ratio: 0.63			
Intersection Signal Delay: 15.6		Intersection LOS: B	
Intersection Capacity Utilization 80.1%		ICU Level of Service D	
Analysis Period (min) 15			

Splits and Phases: 2: 28th Avenue & 16th Street

Movement	EBL	EBT	EBR	WBL	WBT	WBR	NBL	NBT	NBR	SBL	SBT	SBR
Lane Configurations												
Traffic Volume (veh/h)	44	197	33	337	311	62	117	160	80	48	118	17
Future Volume (veh/h)	44	197	33	337	311	62	117	160	80	48	118	17
Initial Q (Qb), veh	0	0	0	0	0	0	0	0	0	0	0	0
Ped-Bike Adj(A_pbT)	1.00		1.00	1.00		1.00	1.00		1.00	1.00		1.00
Parking Bus, Adj	1.00	1.00	1.00	1.00	1.00	1.00	1.00	1.00	1.00	1.00	1.00	1.00
Work Zone On Approach		No			No			No			No	
Adj Sat Flow, veh/h/ln	1900	1826	1752	1885	1841	1515	1752	1796	1870	1589	1618	1752
Adj Flow Rate, veh/h	48	214	36	366	338	67	127	174	87	52	128	18
Peak Hour Factor	0.92	0.92	0.92	0.92	0.92	0.92	0.92	0.92	0.92	0.92	0.92	0.92
Percent Heavy Veh, %	0	5	10	1	4	26	10	7	2	21	19	10
Cap, veh/h	452	609	495	668	796	158	322	282	141	228	347	49
Arrive On Green	0.33	0.33	0.33	0.15	0.53	0.53	0.25	0.25	0.25	0.25	0.25	0.25
Sat Flow, veh/h	996	1826	1485	1795	1492	296	1163	1130	565	950	1388	195
Grp Volume(v), veh/h	48	214	36	366	0	405	127	0	261	52	0	146
Grp Sat Flow(s),veh/h/ln	996	1826	1485	1795	0	1787	1163	0	1695	950	0	1583
Q Serve(g_s), s	2.0	5.3	1.0	7.4	0.0	8.2	6.1	0.0	8.2	3.1	0.0	4.6
Cycle Q Clear(g_c), s	2.0	5.3	1.0	7.4	0.0	8.2	10.6	0.0	8.2	11.3	0.0	4.6
Prop In Lane	1.00		1.00	1.00		0.17	1.00		0.33	1.00		0.12
Lane Grp Cap(c), veh/h	452	609	495	668	0	954	322	0	423	228	0	395
V/C Ratio(X)	0.11	0.35	0.07	0.55	0.00	0.42	0.39	0.00	0.62	0.23	0.00	0.37
Avail Cap(c_a), veh/h	867	1370	1114	668	0	1699	613	0	848	465	0	792
HCM Platoon Ratio	1.00	1.00	1.00	1.00	1.00	1.00	1.00	1.00	1.00	1.00	1.00	1.00
Upstream Filter(I)	1.00	1.00	1.00	1.00	0.00	1.00	1.00	0.00	1.00	1.00	0.00	1.00
Uniform Delay (d), s/veh	14.0	15.1	13.7	9.4	0.0	8.4	23.0	0.0	20.0	25.0	0.0	18.6
Incr Delay (d2), s/veh	0.2	0.6	0.1	0.5	0.0	0.5	0.8	0.0	1.5	0.5	0.0	0.6
Initial Q Delay(d3),s/veh	0.0	0.0	0.0	0.0	0.0	0.0	0.0	0.0	0.0	0.0	0.0	0.0
%ile BackOfQ(50%),veh/ln	0.0	0.2	0.0	0.1	0.0	0.1	0.4	0.0	0.5	0.3	0.0	0.4
Unsig. Movement Delay, s/veh												
LnGrp Delay(d),s/veh	14.2	15.7	13.8	10.0	0.0	9.0	23.8	0.0	21.4	25.5	0.0	19.2
LnGrp LOS	B	B	B	A	A	A	C	A	C	C	A	B
Approach Vol, veh/h		298			771			388			198	
Approach Delay, s/veh		15.2			9.4			22.2			20.8	
Approach LOS		B			A			C			C	

Timer - Assigned Phs	1	2		4		6		8
Phs Duration (G+Y+Rc), s	12.0	27.0		21.0		39.0		21.0
Change Period (Y+Rc), s	3.0	* 7		* 6		* 7		* 6
Max Green Setting (Gmax), s	9.0	* 45		* 30		* 57		* 30
Max Q Clear Time (g_c+I1), s	9.4	7.3		13.3		10.2		12.6
Green Ext Time (p_c), s	0.0	3.6		1.2		5.9		2.3

Intersection Summary		
HCM 6th Ctrl Delay		14.8
HCM 6th LOS		B

Notes

* HCM 6th computational engine requires equal clearance times for the phases crossing the barrier.

Lane Group	EBL	EBR	NBL	NBT	SBT	SBR
Lane Configurations						
Traffic Volume (vph)	29	22	193	329	276	214
Future Volume (vph)	29	22	193	329	276	214
Ideal Flow (vphpl)	1900	1900	1900	1900	1900	1900
Storage Length (m)	0.0	0.0	40.0			15.0
Storage Lanes	1	1	1			1
Taper Length (m)	7.5		7.5			
Lane Util. Factor	1.00	1.00	1.00	1.00	1.00	1.00
Frt		0.850				0.850
Flt Protected	0.950		0.950			
Satd. Flow (prot)	1770	1583	1770	1863	1863	1583
Flt Permitted	0.950		0.950			
Satd. Flow (perm)	1770	1583	1770	1863	1863	1583
Link Speed (k/h)	50			80	80	
Link Distance (m)	127.6			298.9	304.1	
Travel Time (s)	9.2			13.5	13.7	
Peak Hour Factor	0.92	0.92	0.92	0.92	0.92	0.92
Adj. Flow (vph)	32	24	210	358	300	233
Shared Lane Traffic (%)						
Lane Group Flow (vph)	32	24	210	358	300	233
Sign Control	Stop			Free	Free	

Intersection Summary		
Area Type:	Other	
Control Type: Unsignalized		
Intersection Capacity Utilization 38.6%		ICU Level of Service A
Analysis Period (min) 15		

Intersection	
Int Delay, s/veh	2.7

Movement	EBL	EBR	NBL	NBT	SBT	SBR
Lane Configurations						
Traffic Vol, veh/h	29	22	193	329	276	214
Future Vol, veh/h	29	22	193	329	276	214
Conflicting Peds, #/hr	0	0	0	0	0	0
Sign Control	Stop	Stop	Free	Free	Free	Free
RT Channelized	-	None	-	None	-	None
Storage Length	0	0	40	-	-	15
Veh in Median Storage, #	0	-	-	0	0	-
Grade, %	0	-	-	0	0	-
Peak Hour Factor	92	92	92	92	92	92
Heavy Vehicles, %	2	2	2	2	2	2
Mvmt Flow	32	24	210	358	300	233

Major/Minor	Minor2		Major1		Major2	
Conflicting Flow All	1078	300	533	0	-	0
Stage 1	300	-	-	-	-	-
Stage 2	778	-	-	-	-	-
Critical Hdwy	6.42	6.22	4.12	-	-	-
Critical Hdwy Stg 1	5.42	-	-	-	-	-
Critical Hdwy Stg 2	5.42	-	-	-	-	-
Follow-up Hdwy	3.518	3.318	2.218	-	-	-
Pot Cap-1 Maneuver	242	740	1035	-	-	-
Stage 1	752	-	-	-	-	-
Stage 2	453	-	-	-	-	-
Platoon blocked, %				-	-	-
Mov Cap-1 Maneuver	193	740	1035	-	-	-
Mov Cap-2 Maneuver	193	-	-	-	-	-
Stage 1	599	-	-	-	-	-
Stage 2	453	-	-	-	-	-

Approach	EB	NB	SB
HCM Control Delay, s	19.8	3.5	0
HCM LOS	C		

Minor Lane/Major Mvmt	NBL	NBT	EBLn1	EBLn2	SBT	SBR
Capacity (veh/h)	1035	-	193	740	-	-
HCM Lane V/C Ratio	0.203	-	0.163	0.032	-	-
HCM Control Delay (s)	9.4	-	27.3	10	-	-
HCM Lane LOS	A	-	D	B	-	-
HCM 95th %tile Q(veh)	0.8	-	0.6	0.1	-	-

Lane Group	EBL	EBR	NBL	NBT	SBT	SBR
Lane Configurations						
Traffic Volume (vph)	151	7	2	371	235	63
Future Volume (vph)	151	7	2	371	235	63
Ideal Flow (vphpl)	1900	1900	1900	1900	1900	1900
Lane Util. Factor	1.00	1.00	1.00	1.00	1.00	1.00
Frt		0.850			0.972	
Flt Protected	0.950					
Satd. Flow (prot)	1770	1583	0	1863	1811	0
Flt Permitted	0.950					
Satd. Flow (perm)	1770	1583	0	1863	1811	0
Link Speed (k/h)	50			80	80	
Link Distance (m)	308.0			256.5	298.9	
Travel Time (s)	22.2			11.5	13.5	
Peak Hour Factor	0.92	0.92	0.92	0.92	0.92	0.92
Adj. Flow (vph)	164	8	2	403	255	68
Shared Lane Traffic (%)						
Lane Group Flow (vph)	164	8	0	405	323	0
Sign Control	Stop			Free	Free	

Intersection Summary		
Area Type:	Other	
Control Type: Unsignalized		
Intersection Capacity Utilization 36.1%		ICU Level of Service A
Analysis Period (min) 15		

Intersection	
Int Delay, s/veh	3.7

Movement	EBL	EBR	NBL	NBT	SBT	SBR
Lane Configurations						
Traffic Vol, veh/h	151	7	2	371	235	63
Future Vol, veh/h	151	7	2	371	235	63
Conflicting Peds, #/hr	0	0	0	0	0	0
Sign Control	Stop	Stop	Free	Free	Free	Free
RT Channelized	-	None	-	None	-	None
Storage Length	0	0	-	-	-	-
Veh in Median Storage, #	0	-	-	0	0	-
Grade, %	0	-	-	0	0	-
Peak Hour Factor	92	92	92	92	92	92
Heavy Vehicles, %	2	2	2	2	2	2
Mvmt Flow	164	8	2	403	255	68

Major/Minor	Minor2		Major1		Major2	
Conflicting Flow All	696	289	323	0	-	0
Stage 1	289	-	-	-	-	-
Stage 2	407	-	-	-	-	-
Critical Hdwy	6.42	6.22	4.12	-	-	-
Critical Hdwy Stg 1	5.42	-	-	-	-	-
Critical Hdwy Stg 2	5.42	-	-	-	-	-
Follow-up Hdwy	3.518	3.318	2.218	-	-	-
Pot Cap-1 Maneuver	408	750	1237	-	-	-
Stage 1	760	-	-	-	-	-
Stage 2	672	-	-	-	-	-
Platoon blocked, %				-	-	-
Mov Cap-1 Maneuver	407	750	1237	-	-	-
Mov Cap-2 Maneuver	407	-	-	-	-	-
Stage 1	758	-	-	-	-	-
Stage 2	672	-	-	-	-	-

Approach	EB	NB	SB
HCM Control Delay, s	19.3	0	0
HCM LOS	C		

Minor Lane/Major Mvmt	NBL	NBT	EBLn1	EBLn2	SBT	SBR
Capacity (veh/h)	1237	-	407	750	-	-
HCM Lane V/C Ratio	0.002	-	0.403	0.01	-	-
HCM Control Delay (s)	7.9	0	19.7	9.8	-	-
HCM Lane LOS	A	A	C	A	-	-
HCM 95th %tile Q(veh)	0	-	1.9	0	-	-

Lane Group	EBL	EBR	NBL	NBT	SBT	SBR
Lane Configurations						
Traffic Volume (vph)	197	27	92	176	62	179
Future Volume (vph)	197	27	92	176	62	179
Ideal Flow (vphpl)	1900	1900	1900	1900	1900	1900
Storage Length (m)	0.0	20.0	0.0			0.0
Storage Lanes	1	1	0			0
Taper Length (m)	7.5		7.5			
Lane Util. Factor	1.00	1.00	1.00	1.00	1.00	1.00
Frt		0.850			0.900	
Flt Protected	0.950			0.983		
Satd. Flow (prot)	1805	1615	0	1746	1655	0
Flt Permitted	0.950			0.983		
Satd. Flow (perm)	1805	1615	0	1746	1655	0
Link Speed (k/h)	80			60	80	
Link Distance (m)	310.5			265.1	256.5	
Travel Time (s)	14.0			15.9	11.5	
Peak Hour Factor	0.92	0.92	0.92	0.92	0.92	0.92
Heavy Vehicles (%)	0%	0%	5%	8%	10%	1%
Adj. Flow (vph)	214	29	100	191	67	195
Shared Lane Traffic (%)						
Lane Group Flow (vph)	214	29	0	291	262	0
Sign Control	Stop			Free	Free	

Intersection Summary			
Area Type:	Other		
Control Type: Unsignalized			
Intersection Capacity Utilization 49.5%			ICU Level of Service A
Analysis Period (min) 15			

Intersection	
Int Delay, s/veh	6.5

Movement	EBL	EBR	NBL	NBT	SBT	SBR
Lane Configurations						
Traffic Vol, veh/h	197	27	92	176	62	179
Future Vol, veh/h	197	27	92	176	62	179
Conflicting Peds, #/hr	0	0	0	0	0	0
Sign Control	Stop	Stop	Free	Free	Free	Free
RT Channelized	-	None	-	None	-	Yield
Storage Length	0	20	-	-	-	-
Veh in Median Storage, #	0	-	-	0	0	-
Grade, %	0	-	-	0	0	-
Peak Hour Factor	92	92	92	92	92	92
Heavy Vehicles, %	0	0	5	8	10	1
Mvmt Flow	214	29	100	191	67	195

Major/Minor	Minor2		Major1		Major2	
Conflicting Flow All	556	165	67	0	-	0
Stage 1	165	-	-	-	-	-
Stage 2	391	-	-	-	-	-
Critical Hdwy	6.4	6.2	4.15	-	-	-
Critical Hdwy Stg 1	5.4	-	-	-	-	-
Critical Hdwy Stg 2	5.4	-	-	-	-	-
Follow-up Hdwy	3.5	3.3	2.245	-	-	-
Pot Cap-1 Maneuver	496	885	1516	-	-	-
Stage 1	869	-	-	-	-	-
Stage 2	688	-	-	-	-	-
Platoon blocked, %				-	-	-
Mov Cap-1 Maneuver	459	885	1516	-	-	-
Mov Cap-2 Maneuver	459	-	-	-	-	-
Stage 1	805	-	-	-	-	-
Stage 2	688	-	-	-	-	-

Approach	EB	NB	SB
HCM Control Delay, s	18.3	2.6	0
HCM LOS	C		

Minor Lane/Major Mvmt	NBL	NBT	EBLn1	EBLn2	SBT	SBR
Capacity (veh/h)	1516	-	459	885	-	-
HCM Lane V/C Ratio	0.066	-	0.467	0.033	-	-
HCM Control Delay (s)	7.5	0	19.5	9.2	-	-
HCM Lane LOS	A	A	C	A	-	-
HCM 95th %tile Q(veh)	0.2	-	2.4	0.1	-	-

Lane Group	EBL	EBT	WBT	WBR	SBL	SBR
Lane Configurations						
Traffic Volume (vph)	23	178	269	2	45	68
Future Volume (vph)	23	178	269	2	45	68
Ideal Flow (vphpl)	1900	1900	1900	1900	1900	1900
Lane Util. Factor	1.00	1.00	1.00	1.00	1.00	1.00
Frt			0.999		0.919	
Flt Protected		0.994			0.980	
Satd. Flow (prot)	0	1852	1861	0	1678	0
Flt Permitted		0.994			0.980	
Satd. Flow (perm)	0	1852	1861	0	1678	0
Link Speed (k/h)		80	80		50	
Link Distance (m)		166.5	310.5		252.9	
Travel Time (s)		7.5	14.0		18.2	
Peak Hour Factor	0.92	0.92	0.92	0.92	0.92	0.92
Adj. Flow (vph)	25	193	292	2	49	74
Shared Lane Traffic (%)						
Lane Group Flow (vph)	0	218	294	0	123	0
Sign Control		Free	Free		Stop	

Intersection Summary			
Area Type:	Other		
Control Type: Unsignalized			
Intersection Capacity Utilization 41.6%		ICU Level of Service A	
Analysis Period (min) 15			

Intersection	
Int Delay, s/veh	2.7

Movement	EBL	EBT	WBT	WBR	SBL	SBR
Lane Configurations						
Traffic Vol, veh/h	23	178	269	2	45	68
Future Vol, veh/h	23	178	269	2	45	68
Conflicting Peds, #/hr	0	0	0	0	0	0
Sign Control	Free	Free	Free	Free	Stop	Stop
RT Channelized	-	None	-	None	-	None
Storage Length	-	-	-	-	0	-
Veh in Median Storage, #	-	0	0	-	0	-
Grade, %	-	0	0	-	0	-
Peak Hour Factor	92	92	92	92	92	92
Heavy Vehicles, %	2	2	2	2	2	2
Mvmt Flow	25	193	292	2	49	74

Major/Minor	Major1		Major2		Minor2	
Conflicting Flow All	294	0	-	0	536	293
Stage 1	-	-	-	-	293	-
Stage 2	-	-	-	-	243	-
Critical Hdwy	4.12	-	-	-	6.42	6.22
Critical Hdwy Stg 1	-	-	-	-	5.42	-
Critical Hdwy Stg 2	-	-	-	-	5.42	-
Follow-up Hdwy	2.218	-	-	-	3.518	3.318
Pot Cap-1 Maneuver	1268	-	-	-	505	746
Stage 1	-	-	-	-	757	-
Stage 2	-	-	-	-	797	-
Platoon blocked, %		-	-	-		
Mov Cap-1 Maneuver	1268	-	-	-	494	746
Mov Cap-2 Maneuver	-	-	-	-	494	-
Stage 1	-	-	-	-	740	-
Stage 2	-	-	-	-	797	-

Approach	EB	WB	SB
HCM Control Delay, s	0.9	0	12.2
HCM LOS			B

Minor Lane/Major Mvmt	EBL	EBT	WBT	WBR	SBLn1
Capacity (veh/h)	1268	-	-	-	620
HCM Lane V/C Ratio	0.02	-	-	-	0.198
HCM Control Delay (s)	7.9	0	-	-	12.2
HCM Lane LOS	A	A	-	-	B
HCM 95th %tile Q(veh)	0.1	-	-	-	0.7

Lane Group	EBT	EBR	WBL	WBT	NBL	NBR
Lane Configurations						
Traffic Volume (vph)	505	45	0	425	0	155
Future Volume (vph)	505	45	0	425	0	155
Ideal Flow (vphpl)	1900	1900	1900	1900	1900	1900
Lane Util. Factor	1.00	1.00	1.00	1.00	1.00	1.00
Frt	0.989					0.865
Flt Protected						
Satd. Flow (prot)	1842	0	0	1863	0	1611
Flt Permitted						
Satd. Flow (perm)	1842	0	0	1863	0	1611
Link Speed (k/h)	50			50	50	
Link Distance (m)	197.3			405.7	303.8	
Travel Time (s)	14.2			29.2	21.9	
Peak Hour Factor	0.92	0.92	0.92	0.92	0.92	0.92
Adj. Flow (vph)	549	49	0	462	0	168
Shared Lane Traffic (%)						
Lane Group Flow (vph)	598	0	0	462	0	168
Sign Control	Free			Free	Stop	

Intersection Summary	
Area Type:	Other
Control Type: Unsignalized	
Intersection Capacity Utilization 45.6%	ICU Level of Service A
Analysis Period (min) 15	

Intersection	
Int Delay, s/veh	2.1

Movement	EBT	EBR	WBL	WBT	NBL	NBR
Lane Configurations						
Traffic Vol, veh/h	505	45	0	425	0	155
Future Vol, veh/h	505	45	0	425	0	155
Conflicting Peds, #/hr	0	0	0	0	0	0
Sign Control	Free	Free	Free	Free	Stop	Stop
RT Channelized	-	None	-	None	-	None
Storage Length	-	-	-	-	-	0
Veh in Median Storage, #	0	-	-	0	0	-
Grade, %	0	-	-	0	0	-
Peak Hour Factor	92	92	92	92	92	92
Heavy Vehicles, %	2	2	2	2	2	2
Mvmt Flow	549	49	0	462	0	168

Major/Minor	Major1		Major2		Minor1	
Conflicting Flow All	0	0	-	-	-	574
Stage 1	-	-	-	-	-	-
Stage 2	-	-	-	-	-	-
Critical Hdwy	-	-	-	-	-	6.22
Critical Hdwy Stg 1	-	-	-	-	-	-
Critical Hdwy Stg 2	-	-	-	-	-	-
Follow-up Hdwy	-	-	-	-	-	3.318
Pot Cap-1 Maneuver	-	-	0	-	0	518
Stage 1	-	-	0	-	0	-
Stage 2	-	-	0	-	0	-
Platoon blocked, %	-	-		-		
Mov Cap-1 Maneuver	-	-	-	-	-	518
Mov Cap-2 Maneuver	-	-	-	-	-	-
Stage 1	-	-	-	-	-	-
Stage 2	-	-	-	-	-	-

Approach	EB	WB	NB
HCM Control Delay, s	0	0	15.3
HCM LOS			C

Minor Lane/Major Mvmt	NBLn1	EBT	EBR	WBT
Capacity (veh/h)	518	-	-	-
HCM Lane V/C Ratio	0.325	-	-	-
HCM Control Delay (s)	15.3	-	-	-
HCM Lane LOS	C	-	-	-
HCM 95th %tile Q(veh)	1.4	-	-	-

Lane Group	EBL	EBT	EBR	WBL	WBT	WBR	NBL	NBT	NBR	SBL	SBT	SBR
Lane Configurations												
Traffic Volume (vph)	44	499	118	145	277	60	90	151	147	50	173	59
Future Volume (vph)	44	499	118	145	277	60	90	151	147	50	173	59
Ideal Flow (vphpl)	1900	1900	1900	1900	1900	1900	1900	1900	1900	1900	1900	1900
Storage Length (m)	70.0		70.0	120.0		0.0	55.0		0.0	55.0		0.0
Storage Lanes	1		1	1		0	1		0	1		0
Taper Length (m)	100.0			100.0			100.0			100.0		
Lane Util. Factor	1.00	1.00	1.00	1.00	1.00	1.00	1.00	1.00	1.00	1.00	1.00	1.00
Frt			0.850		0.973			0.926			0.962	
Flt Protected	0.950			0.950			0.950			0.950		
Satd. Flow (prot)	1626	1863	1615	1719	1687	0	1736	1620	0	1687	1769	0
Flt Permitted	0.543			0.266			0.514			0.388		
Satd. Flow (perm)	929	1863	1615	481	1687	0	939	1620	0	689	1769	0
Right Turn on Red			Yes			Yes			Yes			Yes
Satd. Flow (RTOR)			128		18			50			18	
Link Speed (k/h)		50			50			80			50	
Link Distance (m)		405.7			474.4			304.1			233.9	
Travel Time (s)		29.2			34.2			13.7			16.8	
Peak Hour Factor	0.92	0.92	0.92	0.92	0.92	0.92	0.92	0.92	0.92	0.92	0.92	0.92
Heavy Vehicles (%)	11%	2%	0%	5%	5%	31%	4%	17%	0%	7%	0%	13%
Adj. Flow (vph)	48	542	128	158	301	65	98	164	160	54	188	64
Shared Lane Traffic (%)												
Lane Group Flow (vph)	48	542	128	158	366	0	98	324	0	54	252	0
Turn Type	Perm	NA	Perm	pm+pt	NA		Perm	NA		Perm	NA	
Protected Phases		2		1	6			8			4	
Permitted Phases	2		2	6			8			4		
Detector Phase	2	2	2	1	6		8	8		4	4	
Switch Phase												
Minimum Initial (s)	20.0	20.0	20.0	5.0	20.0		10.0	10.0		10.0	10.0	
Minimum Split (s)	36.0	36.0	36.0	8.0	36.0		29.0	29.0		29.0	29.0	
Total Split (s)	52.0	52.0	52.0	12.0	64.0		36.0	36.0		36.0	36.0	
Total Split (%)	52.0%	52.0%	52.0%	12.0%	64.0%		36.0%	36.0%		36.0%	36.0%	
Maximum Green (s)	45.0	45.0	45.0	9.0	57.0		30.0	30.0		30.0	30.0	
Yellow Time (s)	5.4	5.4	5.4	3.0	5.4		4.1	4.1		4.1	4.1	
All-Red Time (s)	1.6	1.6	1.6	0.0	1.6		1.9	1.9		1.9	1.9	
Lost Time Adjust (s)	0.0	0.0	0.0	0.0	0.0		0.0	0.0		0.0	0.0	
Total Lost Time (s)	7.0	7.0	7.0	3.0	7.0		6.0	6.0		6.0	6.0	
Lead/Lag	Lag	Lag	Lag	Lead								
Lead-Lag Optimize?	Yes	Yes	Yes	Yes								
Vehicle Extension (s)	4.5	4.5	4.5	2.0	4.5		3.0	3.0		3.0	3.0	
Recall Mode	Min	Min	Min	None	Min		None	None		None	None	
Walk Time (s)	17.0	17.0	17.0		17.0		12.0	12.0		12.0	12.0	
Flash Dont Walk (s)	12.0	12.0	12.0		12.0		7.0	7.0		7.0	7.0	
Pedestrian Calls (#/hr)	0	0	0		0		0	0		0	0	
Act Effct Green (s)	29.9	29.9	29.9	44.8	40.5		18.4	18.4		18.4	18.4	
Actuated g/C Ratio	0.41	0.41	0.41	0.62	0.56		0.25	0.25		0.25	0.25	
v/c Ratio	0.13	0.71	0.17	0.37	0.39		0.41	0.72		0.31	0.55	
Control Delay	15.8	24.5	3.8	9.5	10.6		30.7	32.3		29.8	27.9	
Queue Delay	0.0	0.0	0.0	0.0	0.0		0.0	0.0		0.0	0.0	

Lane Group	EBL	EBT	EBR	WBL	WBT	WBR	NBL	NBT	NBR	SBL	SBT	SBR
Total Delay	15.8	24.5	3.8	9.5	10.6		30.7	32.3		29.8	27.9	
LOS	B	C	A	A	B		C	C		C	C	
Approach Delay		20.2			10.3			31.9			28.3	
Approach LOS		C			B			C			C	
Queue Length 50th (m)	4.0	60.4	0.0	8.1	24.4		11.2	34.2		6.0	27.6	
Queue Length 95th (m)	12.7	120.9	10.1	21.9	56.0		30.8	78.4		19.4	62.6	
Internal Link Dist (m)		381.7			450.4			280.1			209.9	
Turn Bay Length (m)	70.0		70.0	120.0			55.0			55.0		
Base Capacity (vph)	608	1220	1102	458	1365		410	735		300	782	
Starvation Cap Reductn	0	0	0	0	0		0	0		0	0	
Spillback Cap Reductn	0	0	0	0	0		0	0		0	0	
Storage Cap Reductn	0	0	0	0	0		0	0		0	0	
Reduced v/c Ratio	0.08	0.44	0.12	0.34	0.27		0.24	0.44		0.18	0.32	

Intersection Summary

Area Type: Other
Cycle Length: 100
Actuated Cycle Length: 72.7
Natural Cycle: 75
Control Type: Semi Act-Uncoord
Maximum v/c Ratio: 0.72
Intersection Signal Delay: 21.3 — Intersection LOS: C
Intersection Capacity Utilization 81.8% — ICU Level of Service D
Analysis Period (min) 15

Splits and Phases: 2: 28th Avenue & 16th Street

Movement	EBL	EBT	EBR	WBL	WBT	WBR	NBL	NBT	NBR	SBL	SBT	SBR
Lane Configurations												
Traffic Volume (veh/h)	44	499	118	145	277	60	90	151	147	50	173	59
Future Volume (veh/h)	44	499	118	145	277	60	90	151	147	50	173	59
Initial Q (Qb), veh	0	0	0	0	0	0	0	0	0	0	0	0
Ped-Bike Adj(A_pbT)	1.00		1.00	1.00		1.00	1.00		1.00	1.00		1.00
Parking Bus, Adj	1.00	1.00	1.00	1.00	1.00	1.00	1.00	1.00	1.00	1.00	1.00	1.00
Work Zone On Approach		No			No			No			No	
Adj Sat Flow, veh/h/ln	1737	1870	1900	1826	1826	1441	1841	1648	1900	1796	1900	1707
Adj Flow Rate, veh/h	48	542	128	158	301	65	98	164	160	54	188	64
Peak Hour Factor	0.92	0.92	0.92	0.92	0.92	0.92	0.92	0.92	0.92	0.92	0.92	0.92
Percent Heavy Veh, %	11	2	0	5	5	31	4	17	0	7	0	13
Cap, veh/h	476	751	647	353	757	164	302	225	219	205	398	135
Arrive On Green	0.40	0.40	0.40	0.08	0.52	0.52	0.29	0.29	0.29	0.29	0.29	0.29
Sat Flow, veh/h	943	1870	1610	1739	1455	314	1110	766	747	1014	1355	461
Grp Volume(v), veh/h	48	542	128	158	0	366	98	0	324	54	0	252
Grp Sat Flow(s),veh/h/ln	943	1870	1610	1739	0	1769	1110	0	1514	1014	0	1817
Q Serve(g_s), s	2.3	17.1	3.6	3.4	0.0	8.7	5.6	0.0	13.4	3.5	0.0	8.0
Cycle Q Clear(g_c), s	2.7	17.1	3.6	3.4	0.0	8.7	13.5	0.0	13.4	17.0	0.0	8.0
Prop In Lane	1.00		1.00	1.00		0.18	1.00		0.49	1.00		0.25
Lane Grp Cap(c), veh/h	476	751	647	353	0	921	302	0	444	205	0	533
V/C Ratio(X)	0.10	0.72	0.20	0.45	0.00	0.40	0.32	0.00	0.73	0.26	0.00	0.47
Avail Cap(c_a), veh/h	705	1205	1037	445	0	1443	453	0	650	343	0	780
HCM Platoon Ratio	1.00	1.00	1.00	1.00	1.00	1.00	1.00	1.00	1.00	1.00	1.00	1.00
Upstream Filter(I)	1.00	1.00	1.00	1.00	0.00	1.00	1.00	0.00	1.00	1.00	0.00	1.00
Uniform Delay (d), s/veh	13.5	17.6	13.6	12.7	0.0	10.1	25.8	0.0	22.2	29.8	0.0	20.3
Incr Delay (d2), s/veh	0.2	2.3	0.3	0.3	0.0	0.5	0.6	0.0	2.3	0.7	0.0	0.7
Initial Q Delay(d3),s/veh	0.0	0.0	0.0	0.0	0.0	0.0	0.0	0.0	0.0	0.0	0.0	0.0
%ile BackOfQ(50%),veh/ln	0.1	1.3	0.2	0.0	0.0	0.1	0.5	0.0	1.3	0.4	0.0	1.0
Unsig. Movement Delay, s/veh												
LnGrp Delay(d),s/veh	13.6	19.9	13.8	13.0	0.0	10.6	26.4	0.0	24.5	30.5	0.0	20.9
LnGrp LOS	B	B	B	B	A	B	C	A	C	C	A	C
Approach Vol, veh/h		718			524			422			306	
Approach Delay, s/veh		18.4			11.3			25.0			22.6	
Approach LOS		B			B			C			C	

Timer - Assigned Phs	1	2		4		6		8
Phs Duration (G+Y+Rc), s	8.3	35.1		26.5		43.4		26.5
Change Period (Y+Rc), s	3.0	* 7		* 6		* 7		* 6
Max Green Setting (Gmax), s	9.0	* 45		* 30		* 57		* 30
Max Q Clear Time (g_c+I1), s	5.4	19.1		19.0		10.7		15.5
Green Ext Time (p_c), s	0.1	9.0		1.5		5.2		2.6

Intersection Summary		
HCM 6th Ctrl Delay		18.6
HCM 6th LOS		B

Notes

* HCM 6th computational engine requires equal clearance times for the phases crossing the barrier.

Lane Group	EBL	EBR	NBL	NBT	SBT	SBR
Lane Configurations						
Traffic Volume (vph)	46	165	39	340	396	44
Future Volume (vph)	46	165	39	340	396	44
Ideal Flow (vphpl)	1900	1900	1900	1900	1900	1900
Storage Length (m)	0.0	0.0	40.0			15.0
Storage Lanes	1	1	1			1
Taper Length (m)	7.5		7.5			
Lane Util. Factor	1.00	1.00	1.00	1.00	1.00	1.00
Frt		0.850				0.850
Flt Protected	0.950		0.950			
Satd. Flow (prot)	1770	1583	1770	1863	1863	1583
Flt Permitted	0.950		0.950			
Satd. Flow (perm)	1770	1583	1770	1863	1863	1583
Link Speed (k/h)	50			80	80	
Link Distance (m)	127.6			298.9	304.1	
Travel Time (s)	9.2			13.5	13.7	
Peak Hour Factor	0.92	0.92	0.92	0.92	0.92	0.92
Adj. Flow (vph)	50	179	42	370	430	48
Shared Lane Traffic (%)						
Lane Group Flow (vph)	50	179	42	370	430	48
Sign Control	Stop			Free	Free	

Intersection Summary		
Area Type:	Other	
Control Type: Unsignalized		
Intersection Capacity Utilization 37.7%		ICU Level of Service A
Analysis Period (min) 15		

Intersection	
Int Delay, s/veh	3.3

Movement	EBL	EBR	NBL	NBT	SBT	SBR
Lane Configurations						
Traffic Vol, veh/h	46	165	39	340	396	44
Future Vol, veh/h	46	165	39	340	396	44
Conflicting Peds, #/hr	0	0	0	0	0	0
Sign Control	Stop	Stop	Free	Free	Free	Free
RT Channelized	-	None	-	None	-	None
Storage Length	0	0	40	-	-	15
Veh in Median Storage, #	0	-	-	0	0	-
Grade, %	0	-	-	0	0	-
Peak Hour Factor	92	92	92	92	92	92
Heavy Vehicles, %	2	2	2	2	2	2
Mvmt Flow	50	179	42	370	430	48

Major/Minor	Minor2		Major1		Major2	
Conflicting Flow All	884	430	478	0	-	0
Stage 1	430	-	-	-	-	-
Stage 2	454	-	-	-	-	-
Critical Hdwy	6.42	6.22	4.12	-	-	-
Critical Hdwy Stg 1	5.42	-	-	-	-	-
Critical Hdwy Stg 2	5.42	-	-	-	-	-
Follow-up Hdwy	3.518	3.318	2.218	-	-	-
Pot Cap-1 Maneuver	316	625	1084	-	-	-
Stage 1	656	-	-	-	-	-
Stage 2	640	-	-	-	-	-
Platoon blocked, %				-	-	-
Mov Cap-1 Maneuver	304	625	1084	-	-	-
Mov Cap-2 Maneuver	304	-	-	-	-	-
Stage 1	630	-	-	-	-	-
Stage 2	640	-	-	-	-	-

Approach	EB	NB	SB
HCM Control Delay, s	14.4	0.9	0
HCM LOS	B		

Minor Lane/Major Mvmt	NBL	NBT	EBLn1	EBLn2	SBT	SBR
Capacity (veh/h)	1084	-	304	625	-	-
HCM Lane V/C Ratio	0.039	-	0.164	0.287	-	-
HCM Control Delay (s)	8.5	-	19.2	13.1	-	-
HCM Lane LOS	A	-	C	B	-	-
HCM 95th %tile Q(veh)	0.1	-	0.6	1.2	-	-

Lane Group	EBL	EBR	NBL	NBT	SBT	SBR
Lane Configurations						
Traffic Volume (vph)	98	4	6	281	373	188
Future Volume (vph)	98	4	6	281	373	188
Ideal Flow (vphpl)	1900	1900	1900	1900	1900	1900
Lane Util. Factor	1.00	1.00	1.00	1.00	1.00	1.00
Frt		0.850			0.955	
Flt Protected	0.950			0.999		
Satd. Flow (prot)	1770	1583	0	1861	1779	0
Flt Permitted	0.950			0.999		
Satd. Flow (perm)	1770	1583	0	1861	1779	0
Link Speed (k/h)	50			80	80	
Link Distance (m)	308.0			256.5	298.9	
Travel Time (s)	22.2			11.5	13.5	
Peak Hour Factor	0.92	0.92	0.92	0.92	0.92	0.92
Adj. Flow (vph)	107	4	7	305	405	204
Shared Lane Traffic (%)						
Lane Group Flow (vph)	107	4	0	312	609	0
Sign Control	Stop			Free	Free	

Intersection Summary		
Area Type:	Other	
Control Type: Unsignalized		
Intersection Capacity Utilization 43.2%		ICU Level of Service A
Analysis Period (min) 15		

Intersection	
Int Delay, s/veh	2.2

Movement	EBL	EBR	NBL	NBT	SBT	SBR
Lane Configurations						
Traffic Vol, veh/h	98	4	6	281	373	188
Future Vol, veh/h	98	4	6	281	373	188
Conflicting Peds, #/hr	0	0	0	0	0	0
Sign Control	Stop	Stop	Free	Free	Free	Free
RT Channelized	-	None	-	None	-	None
Storage Length	0	0	-	-	-	-
Veh in Median Storage, #	0	-	-	0	0	-
Grade, %	0	-	-	0	0	-
Peak Hour Factor	92	92	92	92	92	92
Heavy Vehicles, %	2	2	2	2	2	2
Mvmt Flow	107	4	7	305	405	204

Major/Minor	Minor2		Major1		Major2	
Conflicting Flow All	826	507	609	0	-	0
Stage 1	507	-	-	-	-	-
Stage 2	319	-	-	-	-	-
Critical Hdwy	6.42	6.22	4.12	-	-	-
Critical Hdwy Stg 1	5.42	-	-	-	-	-
Critical Hdwy Stg 2	5.42	-	-	-	-	-
Follow-up Hdwy	3.518	3.318	2.218	-	-	-
Pot Cap-1 Maneuver	342	566	970	-	-	-
Stage 1	605	-	-	-	-	-
Stage 2	737	-	-	-	-	-
Platoon blocked, %				-	-	-
Mov Cap-1 Maneuver	339	566	970	-	-	-
Mov Cap-2 Maneuver	339	-	-	-	-	-
Stage 1	600	-	-	-	-	-
Stage 2	737	-	-	-	-	-

Approach	EB	NB	SB
HCM Control Delay, s	20	0.2	0
HCM LOS	C		

Minor Lane/Major Mvmt	NBL	NBT	EBLn1	EBLn2	SBT	SBR
Capacity (veh/h)	970	-	339	566	-	-
HCM Lane V/C Ratio	0.007	-	0.314	0.008	-	-
HCM Control Delay (s)	8.7	0	20.4	11.4	-	-
HCM Lane LOS	A	A	C	B	-	-
HCM 95th %tile Q(veh)	0	-	1.3	0	-	-

Lane Group	EBL	EBR	NBL	NBT	SBT	SBR
Lane Configurations						
Traffic Volume (vph)	203	58	36	85	182	194
Future Volume (vph)	203	58	36	85	182	194
Ideal Flow (vphpl)	1900	1900	1900	1900	1900	1900
Storage Length (m)	0.0	20.0	0.0			0.0
Storage Lanes	1	1	0			0
Taper Length (m)	7.5		7.5			
Lane Util. Factor	1.00	1.00	1.00	1.00	1.00	1.00
Frt		0.850			0.930	
Flt Protected	0.950			0.985		
Satd. Flow (prot)	1805	1615	0	1704	1741	0
Flt Permitted	0.950			0.985		
Satd. Flow (perm)	1805	1615	0	1704	1741	0
Link Speed (k/h)	80			60	80	
Link Distance (m)	310.5			265.1	256.5	
Travel Time (s)	14.0			15.9	11.5	
Peak Hour Factor	0.92	0.92	0.92	0.92	0.92	0.92
Heavy Vehicles (%)	0%	0%	0%	14%	2%	1%
Adj. Flow (vph)	221	63	39	92	198	211
Shared Lane Traffic (%)						
Lane Group Flow (vph)	221	63	0	131	409	0
Sign Control	Stop			Free	Free	

Intersection Summary			
Area Type:	Other		
Control Type: Unsignalized			
Intersection Capacity Utilization 49.2%			ICU Level of Service A
Analysis Period (min) 15			

Intersection	
Int Delay, s/veh	5.5

Movement	EBL	EBR	NBL	NBT	SBT	SBR
Lane Configurations						
Traffic Vol, veh/h	203	58	36	85	182	194
Future Vol, veh/h	203	58	36	85	182	194
Conflicting Peds, #/hr	0	0	0	0	0	0
Sign Control	Stop	Stop	Free	Free	Free	Free
RT Channelized	-	None	-	None	-	Yield
Storage Length	0	20	-	-	-	-
Veh in Median Storage, #	0	-	-	0	0	-
Grade, %	0	-	-	0	0	-
Peak Hour Factor	92	92	92	92	92	92
Heavy Vehicles, %	0	0	0	14	2	1
Mvmt Flow	221	63	39	92	198	211

Major/Minor	Minor2		Major1		Major2	
Conflicting Flow All	474	304	198	0	-	0
Stage 1	304	-	-	-	-	-
Stage 2	170	-	-	-	-	-
Critical Hdwy	6.4	6.2	4.1	-	-	-
Critical Hdwy Stg 1	5.4	-	-	-	-	-
Critical Hdwy Stg 2	5.4	-	-	-	-	-
Follow-up Hdwy	3.5	3.3	2.2	-	-	-
Pot Cap-1 Maneuver	553	740	1387	-	-	-
Stage 1	753	-	-	-	-	-
Stage 2	865	-	-	-	-	-
Platoon blocked, %				-	-	-
Mov Cap-1 Maneuver	536	740	1387	-	-	-
Mov Cap-2 Maneuver	536	-	-	-	-	-
Stage 1	730	-	-	-	-	-
Stage 2	865	-	-	-	-	-

Approach	EB	NB	SB
HCM Control Delay, s	15	2.3	0
HCM LOS	C		

Minor Lane/Major Mvmt	NBL	NBT	EBLn1	EBLn2	SBT	SBR
Capacity (veh/h)	1387	-	536	740	-	-
HCM Lane V/C Ratio	0.028	-	0.412	0.085	-	-
HCM Control Delay (s)	7.7	0	16.3	10.3	-	-
HCM Lane LOS	A	A	C	B	-	-
HCM 95th %tile Q(veh)	0.1	-	2	0.3	-	-

Lane Group	EBL	EBT	WBT	WBR	SBL	SBR
Lane Configurations						
Traffic Volume (vph)	67	232	223	7	29	43
Future Volume (vph)	67	232	223	7	29	43
Ideal Flow (vphpl)	1900	1900	1900	1900	1900	1900
Lane Util. Factor	1.00	1.00	1.00	1.00	1.00	1.00
Frt			0.996		0.920	
Flt Protected		0.989			0.980	
Satd. Flow (prot)	0	1842	1855	0	1679	0
Flt Permitted		0.989			0.980	
Satd. Flow (perm)	0	1842	1855	0	1679	0
Link Speed (k/h)		80	80		50	
Link Distance (m)		166.5	310.5		252.9	
Travel Time (s)		7.5	14.0		18.2	
Peak Hour Factor	0.92	0.92	0.92	0.92	0.92	0.92
Adj. Flow (vph)	73	252	242	8	32	47
Shared Lane Traffic (%)						
Lane Group Flow (vph)	0	325	250	0	79	0
Sign Control		Free	Free		Stop	

Intersection Summary			
Area Type:	Other		
Control Type: Unsignalized			
Intersection Capacity Utilization 42.3%		ICU Level of Service A	
Analysis Period (min) 15			

Intersection	
Int Delay, s/veh	2.4

Movement	EBL	EBT	WBT	WBR	SBL	SBR
Lane Configurations						
Traffic Vol, veh/h	67	232	223	7	29	43
Future Vol, veh/h	67	232	223	7	29	43
Conflicting Peds, #/hr	0	0	0	0	0	0
Sign Control	Free	Free	Free	Free	Stop	Stop
RT Channelized	-	None	-	None	-	None
Storage Length	-	-	-	-	0	-
Veh in Median Storage, #	-	0	0	-	0	-
Grade, %	-	0	0	-	0	-
Peak Hour Factor	92	92	92	92	92	92
Heavy Vehicles, %	2	2	2	2	2	2
Mvmt Flow	73	252	242	8	32	47

Major/Minor	Major1		Major2		Minor2	
Conflicting Flow All	250	0	-	0	644	246
Stage 1	-	-	-	-	246	-
Stage 2	-	-	-	-	398	-
Critical Hdwy	4.12	-	-	-	6.42	6.22
Critical Hdwy Stg 1	-	-	-	-	5.42	-
Critical Hdwy Stg 2	-	-	-	-	5.42	-
Follow-up Hdwy	2.218	-	-	-	3.518	3.318
Pot Cap-1 Maneuver	1316	-	-	-	437	793
Stage 1	-	-	-	-	795	-
Stage 2	-	-	-	-	678	-
Platoon blocked, %		-	-	-		
Mov Cap-1 Maneuver	1316	-	-	-	409	793
Mov Cap-2 Maneuver	-	-	-	-	409	-
Stage 1	-	-	-	-	743	-
Stage 2	-	-	-	-	678	-

Approach	EB	WB	SB
HCM Control Delay, s	1.8	0	12.2
HCM LOS			B

Minor Lane/Major Mvmt	EBL	EBT	WBT	WBR	SBLn1
Capacity (veh/h)	1316	-	-	-	575
HCM Lane V/C Ratio	0.055	-	-	-	0.136
HCM Control Delay (s)	7.9	0	-	-	12.2
HCM Lane LOS	A	A	-	-	B
HCM 95th %tile Q(veh)	0.2	-	-	-	0.5

Appendix J

2038 Total Traffic Operations Reports

Lane Group	EBT	EBR	WBL	WBT	NBL	NBR
Lane Configurations						
Traffic Volume (vph)	250	34	0	454	0	25
Future Volume (vph)	250	34	0	454	0	25
Ideal Flow (vphpl)	1900	1900	1900	1900	1900	1900
Lane Util. Factor	1.00	1.00	1.00	1.00	1.00	1.00
Frt	0.984					0.865
Flt Protected						
Satd. Flow (prot)	1833	0	0	1863	0	1611
Flt Permitted						
Satd. Flow (perm)	1833	0	0	1863	0	1611
Link Speed (k/h)	50			50	50	
Link Distance (m)	197.3			405.7	303.8	
Travel Time (s)	14.2			29.2	21.9	
Peak Hour Factor	0.92	0.92	0.92	0.92	0.92	0.92
Adj. Flow (vph)	272	37	0	493	0	27
Shared Lane Traffic (%)						
Lane Group Flow (vph)	309	0	0	493	0	27
Sign Control	Free			Free	Stop	

Intersection Summary	
Area Type:	Other
Control Type: Unsignalized	
Intersection Capacity Utilization 27.2%	ICU Level of Service A
Analysis Period (min) 15	

Intersection	
Int Delay, s/veh	0.3

Movement	EBT	EBR	WBL	WBT	NBL	NBR
Lane Configurations						
Traffic Vol, veh/h	250	34	0	454	0	25
Future Vol, veh/h	250	34	0	454	0	25
Conflicting Peds, #/hr	0	0	0	0	0	0
Sign Control	Free	Free	Free	Free	Stop	Stop
RT Channelized	-	None	-	None	-	None
Storage Length	-	-	-	-	-	0
Veh in Median Storage, #	0	-	-	0	0	-
Grade, %	0	-	-	0	0	-
Peak Hour Factor	92	92	92	92	92	92
Heavy Vehicles, %	2	2	2	2	2	2
Mvmt Flow	272	37	0	493	0	27

Major/Minor	Major1		Major2		Minor1	
Conflicting Flow All	0	0	-	-	-	291
Stage 1	-	-	-	-	-	-
Stage 2	-	-	-	-	-	-
Critical Hdwy	-	-	-	-	-	6.22
Critical Hdwy Stg 1	-	-	-	-	-	-
Critical Hdwy Stg 2	-	-	-	-	-	-
Follow-up Hdwy	-	-	-	-	-	3.318
Pot Cap-1 Maneuver	-	-	0	-	0	748
Stage 1	-	-	0	-	0	-
Stage 2	-	-	0	-	0	-
Platoon blocked, %	-	-		-		
Mov Cap-1 Maneuver	-	-	-	-	-	748
Mov Cap-2 Maneuver	-	-	-	-	-	-
Stage 1	-	-	-	-	-	-
Stage 2	-	-	-	-	-	-

Approach	EB	WB	NB
HCM Control Delay, s	0	0	10
HCM LOS			B

Minor Lane/Major Mvmt	NBLn1	EBT	EBR	WBT
Capacity (veh/h)	748	-	-	-
HCM Lane V/C Ratio	0.036	-	-	-
HCM Control Delay (s)	10	-	-	-
HCM Lane LOS	B	-	-	-
HCM 95th %tile Q(veh)	0.1	-	-	-

Lane Group	EBL	EBT	EBR	WBL	WBT	WBR	NBL	NBT	NBR	SBL	SBT	SBR
Lane Configurations												
Traffic Volume (vph)	44	197	33	362	311	62	125	183	95	48	156	17
Future Volume (vph)	44	197	33	362	311	62	125	183	95	48	156	17
Ideal Flow (vphpl)	1900	1900	1900	1900	1900	1900	1900	1900	1900	1900	1900	1900
Storage Length (m)	70.0		70.0	120.0		0.0	55.0		0.0	55.0		0.0
Storage Lanes	1		1	1		0	1		0	1		0
Taper Length (m)	100.0			100.0			100.0			100.0		
Lane Util. Factor	1.00	1.00	1.00	1.00	1.00	1.00	1.00	1.00	1.00	1.00	1.00	1.00
Frt			0.850		0.975			0.949			0.986	
Flt Protected	0.950			0.950			0.950			0.950		
Satd. Flow (prot)	1805	1810	1468	1787	1721	0	1641	1712	0	1492	1586	0
Flt Permitted	0.524			0.543			0.639			0.457		
Satd. Flow (perm)	996	1810	1468	1021	1721	0	1104	1712	0	718	1586	0
Right Turn on Red			Yes			Yes			Yes			Yes
Satd. Flow (RTOR)			65		17			27			5	
Link Speed (k/h)		50			50			80			50	
Link Distance (m)		405.7			474.4			304.1			233.9	
Travel Time (s)		29.2			34.2			13.7			16.8	
Peak Hour Factor	0.92	0.92	0.92	0.92	0.92	0.92	0.92	0.92	0.92	0.92	0.92	0.92
Heavy Vehicles (%)	0%	5%	10%	1%	4%	26%	10%	7%	2%	21%	19%	10%
Adj. Flow (vph)	48	214	36	393	338	67	136	199	103	52	170	18
Shared Lane Traffic (%)												
Lane Group Flow (vph)	48	214	36	393	405	0	136	302	0	52	188	0
Turn Type	Perm	NA	Perm	pm+pt	NA		Perm	NA		Perm	NA	
Protected Phases		2		1	6			8			4	
Permitted Phases	2		2	6			8			4		
Detector Phase	2	2	2	1	6		8	8		4	4	
Switch Phase												
Minimum Initial (s)	20.0	20.0	20.0	5.0	20.0		10.0	10.0		10.0	10.0	
Minimum Split (s)	36.0	36.0	36.0	8.0	36.0		29.0	29.0		29.0	29.0	
Total Split (s)	52.0	52.0	52.0	12.0	64.0		36.0	36.0		36.0	36.0	
Total Split (%)	52.0%	52.0%	52.0%	12.0%	64.0%		36.0%	36.0%		36.0%	36.0%	
Maximum Green (s)	45.0	45.0	45.0	9.0	57.0		30.0	30.0		30.0	30.0	
Yellow Time (s)	5.4	5.4	5.4	3.0	5.4		4.1	4.1		4.1	4.1	
All-Red Time (s)	1.6	1.6	1.6	0.0	1.6		1.9	1.9		1.9	1.9	
Lost Time Adjust (s)	0.0	0.0	0.0	0.0	0.0		0.0	0.0		0.0	0.0	
Total Lost Time (s)	7.0	7.0	7.0	3.0	7.0		6.0	6.0		6.0	6.0	
Lead/Lag	Lag	Lag	Lag	Lead								
Lead-Lag Optimize?	Yes	Yes	Yes	Yes								
Vehicle Extension (s)	4.5	4.5	4.5	2.0	4.5		3.0	3.0		3.0	3.0	
Recall Mode	Min	Min	Min	None	Min		None	None		None	None	
Walk Time (s)	17.0	17.0	17.0		17.0		12.0	12.0		12.0	12.0	
Flash Dont Walk (s)	12.0	12.0	12.0		12.0		7.0	7.0		7.0	7.0	
Pedestrian Calls (#/hr)	0	0	0		0		0	0		0	0	
Act Effct Green (s)	20.1	20.1	20.1	35.9	31.9		14.8	14.8		14.8	14.8	
Actuated g/C Ratio	0.34	0.34	0.34	0.60	0.53		0.25	0.25		0.25	0.25	
v/c Ratio	0.14	0.35	0.07	0.54	0.44		0.50	0.68		0.29	0.47	
Control Delay	16.9	18.1	2.5	10.3	10.8		25.9	26.7		22.6	22.7	
Queue Delay	0.0	0.0	0.0	0.0	0.0		0.0	0.0		0.0	0.0	

Lane Group	EBL	EBT	EBR	WBL	WBT	WBR	NBL	NBT	NBR	SBL	SBT	SBR
Total Delay	16.9	18.1	2.5	10.3	10.8		25.9	26.7		22.6	22.7	
LOS	B	B	A	B	B		C	C		C	C	
Approach Delay		16.1			10.5			26.4			22.6	
Approach LOS		B			B			C			C	
Queue Length 50th (m)	3.8	18.2	0.0	19.8	24.2		13.5	28.5		4.9	17.9	
Queue Length 95th (m)	12.0	38.8	3.0	44.5	52.9		28.1	51.6		13.2	34.3	
Internal Link Dist (m)		381.7			450.4			280.1			209.9	
Turn Bay Length (m)	70.0		70.0	120.0			55.0			55.0		
Base Capacity (vph)	752	1367	1125	729	1627		556	875		361	801	
Starvation Cap Reductn	0	0	0	0	0		0	0		0	0	
Spillback Cap Reductn	0	0	0	0	0		0	0		0	0	
Storage Cap Reductn	0	0	0	0	0		0	0		0	0	
Reduced v/c Ratio	0.06	0.16	0.03	0.54	0.25		0.24	0.35		0.14	0.23	

Intersection Summary

Area Type: Other
Cycle Length: 100
Actuated Cycle Length: 59.8
Natural Cycle: 75
Control Type: Semi Act-Uncoord
Maximum v/c Ratio: 0.68
Intersection Signal Delay: 17.0 — Intersection LOS: B
Intersection Capacity Utilization 82.2% — ICU Level of Service E
Analysis Period (min) 15

Splits and Phases: 2: 28th Avenue & 16th Street

Movement	EBL	EBT	EBR	WBL	WBT	WBR	NBL	NBT	NBR	SBL	SBT	SBR
Lane Configurations												
Traffic Volume (veh/h)	44	197	33	362	311	62	125	183	95	48	156	17
Future Volume (veh/h)	44	197	33	362	311	62	125	183	95	48	156	17
Initial Q (Qb), veh	0	0	0	0	0	0	0	0	0	0	0	0
Ped-Bike Adj(A_pbT)	1.00		1.00	1.00		1.00	1.00		1.00	1.00		1.00
Parking Bus, Adj	1.00	1.00	1.00	1.00	1.00	1.00	1.00	1.00	1.00	1.00	1.00	1.00
Work Zone On Approach		No			No			No			No	
Adj Sat Flow, veh/h/ln	1900	1826	1752	1885	1841	1515	1752	1796	1870	1589	1618	1752
Adj Flow Rate, veh/h	48	214	36	393	338	67	136	199	103	52	170	18
Peak Hour Factor	0.92	0.92	0.92	0.92	0.92	0.92	0.92	0.92	0.92	0.92	0.92	0.92
Percent Heavy Veh, %	0	5	10	1	4	26	10	7	2	21	19	10
Cap, veh/h	433	583	474	633	762	151	323	314	163	230	405	43
Arrive On Green	0.32	0.32	0.32	0.14	0.51	0.51	0.28	0.28	0.28	0.28	0.28	0.28
Sat Flow, veh/h	996	1826	1485	1795	1492	296	1120	1115	577	915	1439	152
Grp Volume(v), veh/h	48	214	36	393	0	405	136	0	302	52	0	188
Grp Sat Flow(s),veh/h/ln	996	1826	1485	1795	0	1787	1120	0	1692	915	0	1591
Q Serve(g_s), s	2.2	5.7	1.1	8.9	0.0	9.0	7.1	0.0	9.8	3.3	0.0	6.0
Cycle Q Clear(g_c), s	2.2	5.7	1.1	8.9	0.0	9.0	13.1	0.0	9.8	13.1	0.0	6.0
Prop In Lane	1.00		1.00	1.00		0.17	1.00		0.34	1.00		0.10
Lane Grp Cap(c), veh/h	433	583	474	633	0	913	323	0	477	230	0	448
V/C Ratio(X)	0.11	0.37	0.08	0.62	0.00	0.44	0.42	0.00	0.63	0.23	0.00	0.42
Avail Cap(c_a), veh/h	830	1312	1066	633	0	1626	543	0	810	410	0	762
HCM Platoon Ratio	1.00	1.00	1.00	1.00	1.00	1.00	1.00	1.00	1.00	1.00	1.00	1.00
Upstream Filter(I)	1.00	1.00	1.00	1.00	0.00	1.00	1.00	0.00	1.00	1.00	0.00	1.00
Uniform Delay (d), s/veh	15.3	16.4	14.9	10.9	0.0	9.7	23.7	0.0	19.7	25.4	0.0	18.3
Incr Delay (d2), s/veh	0.2	0.7	0.1	1.4	0.0	0.6	0.9	0.0	1.4	0.5	0.0	0.6
Initial Q Delay(d3),s/veh	0.0	0.0	0.0	0.0	0.0	0.0	0.0	0.0	0.0	0.0	0.0	0.0
%ile BackOfQ(50%),veh/ln	0.1	0.4	0.1	0.2	0.0	0.1	0.5	0.0	0.6	0.3	0.0	0.5
Unsig. Movement Delay, s/veh												
LnGrp Delay(d),s/veh	15.4	17.1	15.0	12.3	0.0	10.3	24.5	0.0	21.1	25.9	0.0	19.0
LnGrp LOS	B	B	B	B	A	B	C	A	C	C	A	B
Approach Vol, veh/h		298			798			438			240	
Approach Delay, s/veh		16.6			11.3			22.1			20.5	
Approach LOS		B			B			C			C	

Timer - Assigned Phs	1	2		4		6		8
Phs Duration (G+Y+Rc), s	12.0	27.0		23.6		39.0		23.6
Change Period (Y+Rc), s	3.0	* 7		* 6		* 7		* 6
Max Green Setting (Gmax), s	9.0	* 45		* 30		* 57		* 30
Max Q Clear Time (g_c+I1), s	10.9	7.7		15.1		11.0		15.1
Green Ext Time (p_c), s	0.0	3.6		1.4		5.9		2.6

Intersection Summary		
HCM 6th Ctrl Delay		16.1
HCM 6th LOS		B

Notes

* HCM 6th computational engine requires equal clearance times for the phases crossing the barrier.

Lane Group	EBL	EBR	NBL	NBT	SBT	SBR
Lane Configurations						
Traffic Volume (vph)	75	130	371	329	276	277
Future Volume (vph)	75	130	371	329	276	277
Ideal Flow (vphpl)	1900	1900	1900	1900	1900	1900
Storage Length (m)	0.0	0.0	40.0			15.0
Storage Lanes	1	1	1			1
Taper Length (m)	7.5		7.5			
Lane Util. Factor	1.00	1.00	1.00	1.00	1.00	1.00
Frt		0.850				0.850
Flt Protected	0.950		0.950			
Satd. Flow (prot)	1770	1583	1770	1863	1863	1583
Flt Permitted	0.950		0.950			
Satd. Flow (perm)	1770	1583	1770	1863	1863	1583
Link Speed (k/h)	50			80	80	
Link Distance (m)	127.6			298.9	304.1	
Travel Time (s)	9.2			13.5	13.7	
Peak Hour Factor	0.92	0.92	0.92	0.92	0.92	0.92
Adj. Flow (vph)	82	141	403	358	300	301
Shared Lane Traffic (%)						
Lane Group Flow (vph)	82	141	403	358	300	301
Sign Control	Stop			Free	Free	

Intersection Summary		
Area Type:	Other	
Control Type: Unsignalized		
Intersection Capacity Utilization 49.2%		ICU Level of Service A
Analysis Period (min) 15		

Intersection	
Int Delay, s/veh	13.3

Movement	EBL	EBR	NBL	NBT	SBT	SBR
Lane Configurations						
Traffic Vol, veh/h	75	130	371	329	276	277
Future Vol, veh/h	75	130	371	329	276	277
Conflicting Peds, #/hr	0	0	0	0	0	0
Sign Control	Stop	Stop	Free	Free	Free	Free
RT Channelized	-	None	-	None	-	None
Storage Length	0	0	40	-	-	15
Veh in Median Storage, #	0	-	-	0	0	-
Grade, %	0	-	-	0	0	-
Peak Hour Factor	92	92	92	92	92	92
Heavy Vehicles, %	2	2	2	2	2	2
Mvmt Flow	82	141	403	358	300	301

Major/Minor	Minor2		Major1		Major2	
Conflicting Flow All	1464	300	601	0	-	0
Stage 1	300	-	-	-	-	-
Stage 2	1164	-	-	-	-	-
Critical Hdwy	6.42	6.22	4.12	-	-	-
Critical Hdwy Stg 1	5.42	-	-	-	-	-
Critical Hdwy Stg 2	5.42	-	-	-	-	-
Follow-up Hdwy	3.518	3.318	2.218	-	-	-
Pot Cap-1 Maneuver	141	740	976	-	-	-
Stage 1	752	-	-	-	-	-
Stage 2	297	-	-	-	-	-
Platoon blocked, %				-	-	-
Mov Cap-1 Maneuver	83	740	976	-	-	-
Mov Cap-2 Maneuver	83	-	-	-	-	-
Stage 1	441	-	-	-	-	-
Stage 2	297	-	-	-	-	-

Approach	EB	NB	SB
HCM Control Delay, s	73.9	6	0
HCM LOS	F		

Minor Lane/Major Mvmt	NBL	NBT	EBLn1	EBLn2	SBT	SBR
Capacity (veh/h)	976	-	83	740	-	-
HCM Lane V/C Ratio	0.413	-	0.982	0.191	-	-
HCM Control Delay (s)	11.3	-	182.9	11	-	-
HCM Lane LOS	B	-	F	B	-	-
HCM 95th %tile Q(veh)	2.1	-	5.4	0.7	-	-

Lane Group	EBL	EBR	NBL	NBT	SBT	SBR
Lane Configurations						
Traffic Volume (vph)	151	7	2	549	343	63
Future Volume (vph)	151	7	2	549	343	63
Ideal Flow (vphpl)	1900	1900	1900	1900	1900	1900
Lane Util. Factor	1.00	1.00	1.00	1.00	1.00	1.00
Frt		0.850			0.979	
Flt Protected	0.950					
Satd. Flow (prot)	1770	1583	0	1863	1824	0
Flt Permitted	0.950					
Satd. Flow (perm)	1770	1583	0	1863	1824	0
Link Speed (k/h)	50			80	80	
Link Distance (m)	308.0			256.5	298.9	
Travel Time (s)	22.2			11.5	13.5	
Peak Hour Factor	0.92	0.92	0.92	0.92	0.92	0.92
Adj. Flow (vph)	164	8	2	597	373	68
Shared Lane Traffic (%)						
Lane Group Flow (vph)	164	8	0	599	441	0
Sign Control	Stop			Free	Free	

Intersection Summary			
Area Type:	Other		
Control Type: Unsignalized			
Intersection Capacity Utilization 45.5%		ICU Level of Service A	
Analysis Period (min) 15			

Intersection	
Int Delay, s/veh	5.2

Movement	EBL	EBR	NBL	NBT	SBT	SBR
Lane Configurations						
Traffic Vol, veh/h	151	7	2	549	343	63
Future Vol, veh/h	151	7	2	549	343	63
Conflicting Peds, #/hr	0	0	0	0	0	0
Sign Control	Stop	Stop	Free	Free	Free	Free
RT Channelized	-	None	-	None	-	None
Storage Length	0	0	-	-	-	-
Veh in Median Storage, #	0	-	-	0	0	-
Grade, %	0	-	-	0	0	-
Peak Hour Factor	92	92	92	92	92	92
Heavy Vehicles, %	2	2	2	2	2	2
Mvmt Flow	164	8	2	597	373	68

Major/Minor	Minor2		Major1		Major2	
Conflicting Flow All	1008	407	441	0	-	0
Stage 1	407	-	-	-	-	-
Stage 2	601	-	-	-	-	-
Critical Hdwy	6.42	6.22	4.12	-	-	-
Critical Hdwy Stg 1	5.42	-	-	-	-	-
Critical Hdwy Stg 2	5.42	-	-	-	-	-
Follow-up Hdwy	3.518	3.318	2.218	-	-	-
Pot Cap-1 Maneuver	267	644	1119	-	-	-
Stage 1	672	-	-	-	-	-
Stage 2	547	-	-	-	-	-
Platoon blocked, %				-	-	-
Mov Cap-1 Maneuver	266	644	1119	-	-	-
Mov Cap-2 Maneuver	266	-	-	-	-	-
Stage 1	670	-	-	-	-	-
Stage 2	547	-	-	-	-	-

Approach	EB	NB	SB
HCM Control Delay, s	36.9	0	0
HCM LOS	E		

Minor Lane/Major Mvmt	NBL	NBT	EBLn1	EBLn2	SBT	SBR
Capacity (veh/h)	1119	-	266	644	-	-
HCM Lane V/C Ratio	0.002	-	0.617	0.012	-	-
HCM Control Delay (s)	8.2	0	38.1	10.7	-	-
HCM Lane LOS	A	A	E	B	-	-
HCM 95th %tile Q(veh)	0	-	3.7	0	-	-

Lane Group	EBL	EBR	NBL	NBT	SBT	SBR
Lane Configurations						
Traffic Volume (vph)	337	27	92	214	85	264
Future Volume (vph)	337	27	92	214	85	264
Ideal Flow (vphpl)	1900	1900	1900	1900	1900	1900
Storage Length (m)	0.0	20.0	0.0			0.0
Storage Lanes	1	1	0			0
Taper Length (m)	7.5		7.5			
Lane Util. Factor	1.00	1.00	1.00	1.00	1.00	1.00
Frt		0.850			0.898	
Flt Protected	0.950			0.985		
Satd. Flow (prot)	1805	1615	0	1747	1654	0
Flt Permitted	0.950			0.985		
Satd. Flow (perm)	1805	1615	0	1747	1654	0
Link Speed (k/h)	80			60	80	
Link Distance (m)	310.5			265.1	256.5	
Travel Time (s)	14.0			15.9	11.5	
Peak Hour Factor	0.92	0.92	0.92	0.92	0.92	0.92
Heavy Vehicles (%)	0%	0%	5%	8%	10%	1%
Adj. Flow (vph)	366	29	100	233	92	287
Shared Lane Traffic (%)						
Lane Group Flow (vph)	366	29	0	333	379	0
Sign Control	Stop			Free	Free	

Intersection Summary			
Area Type:	Other		
Control Type: Unsignalized			
Intersection Capacity Utilization 65.7%			ICU Level of Service C
Analysis Period (min) 15			

Intersection	
Int Delay, s/veh	21.7

Movement	EBL	EBR	NBL	NBT	SBT	SBR
Lane Configurations						
Traffic Vol, veh/h	337	27	92	214	85	264
Future Vol, veh/h	337	27	92	214	85	264
Conflicting Peds, #/hr	0	0	0	0	0	0
Sign Control	Stop	Stop	Free	Free	Free	Free
RT Channelized	-	None	-	None	-	Yield
Storage Length	0	20	-	-	-	-
Veh in Median Storage, #	0	-	-	0	0	-
Grade, %	0	-	-	0	0	-
Peak Hour Factor	92	92	92	92	92	92
Heavy Vehicles, %	0	0	5	8	10	1
Mvmt Flow	366	29	100	233	92	287

Major/Minor	Minor2		Major1		Major2	
Conflicting Flow All	669	236	92	0	-	0
Stage 1	236	-	-	-	-	-
Stage 2	433	-	-	-	-	-
Critical Hdwy	6.4	6.2	4.15	-	-	-
Critical Hdwy Stg 1	5.4	-	-	-	-	-
Critical Hdwy Stg 2	5.4	-	-	-	-	-
Follow-up Hdwy	3.5	3.3	2.245	-	-	-
Pot Cap-1 Maneuver	426	808	1484	-	-	-
Stage 1	808	-	-	-	-	-
Stage 2	658	-	-	-	-	-
Platoon blocked, %				-	-	-
Mov Cap-1 Maneuver	393	808	1484	-	-	-
Mov Cap-2 Maneuver	393	-	-	-	-	-
Stage 1	746	-	-	-	-	-
Stage 2	658	-	-	-	-	-

Approach	EB	NB	SB
HCM Control Delay, s	58.8	2.3	0
HCM LOS	F		

Minor Lane/Major Mvmt	NBL	NBT	EBLn1	EBLn2	SBT	SBR
Capacity (veh/h)	1484	-	393	808	-	-
HCM Lane V/C Ratio	0.067	-	0.932	0.036	-	-
HCM Control Delay (s)	7.6	0	62.7	9.6	-	-
HCM Lane LOS	A	A	F	A	-	-
HCM 95th %tile Q(veh)	0.2	-	10.2	0.1	-	-

Lane Group	EBL	EBT	WBT	WBR	SBL	SBR
Lane Configurations						
Traffic Volume (vph)	23	318	354	2	45	68
Future Volume (vph)	23	318	354	2	45	68
Ideal Flow (vphpl)	1900	1900	1900	1900	1900	1900
Lane Util. Factor	1.00	1.00	1.00	1.00	1.00	1.00
Frt			0.999		0.919	
Flt Protected		0.997			0.980	
Satd. Flow (prot)	0	1857	1861	0	1678	0
Flt Permitted		0.997			0.980	
Satd. Flow (perm)	0	1857	1861	0	1678	0
Link Speed (k/h)		80	80		50	
Link Distance (m)		166.5	310.5		252.9	
Travel Time (s)		7.5	14.0		18.2	
Peak Hour Factor	0.92	0.92	0.92	0.92	0.92	0.92
Adj. Flow (vph)	25	346	385	2	49	74
Shared Lane Traffic (%)						
Lane Group Flow (vph)	0	371	387	0	123	0
Sign Control		Free	Free		Stop	

Intersection Summary			
Area Type:	Other		
Control Type: Unsignalized			
Intersection Capacity Utilization 49.0%		ICU Level of Service A	
Analysis Period (min) 15			

Intersection	
Int Delay, s/veh	2.3

Movement	EBL	EBT	WBT	WBR	SBL	SBR
Lane Configurations						
Traffic Vol, veh/h	23	318	354	2	45	68
Future Vol, veh/h	23	318	354	2	45	68
Conflicting Peds, #/hr	0	0	0	0	0	0
Sign Control	Free	Free	Free	Free	Stop	Stop
RT Channelized	-	None	-	None	-	None
Storage Length	-	-	-	-	0	-
Veh in Median Storage, #	-	0	0	-	0	-
Grade, %	-	0	0	-	0	-
Peak Hour Factor	92	92	92	92	92	92
Heavy Vehicles, %	2	2	2	2	2	2
Mvmt Flow	25	346	385	2	49	74

Major/Minor	Major1		Major2		Minor2	
Conflicting Flow All	387	0	-	0	782	386
Stage 1	-	-	-	-	386	-
Stage 2	-	-	-	-	396	-
Critical Hdwy	4.12	-	-	-	6.42	6.22
Critical Hdwy Stg 1	-	-	-	-	5.42	-
Critical Hdwy Stg 2	-	-	-	-	5.42	-
Follow-up Hdwy	2.218	-	-	-	3.518	3.318
Pot Cap-1 Maneuver	1171	-	-	-	363	662
Stage 1	-	-	-	-	687	-
Stage 2	-	-	-	-	680	-
Platoon blocked, %		-	-	-		
Mov Cap-1 Maneuver	1171	-	-	-	354	662
Mov Cap-2 Maneuver	-	-	-	-	354	-
Stage 1	-	-	-	-	669	-
Stage 2	-	-	-	-	680	-

Approach	EB	WB	SB
HCM Control Delay, s	0.5	0	14.7
HCM LOS			B

Minor Lane/Major Mvmt	EBL	EBT	WBT	WBR	SBLn1
Capacity (veh/h)	1171	-	-	-	492
HCM Lane V/C Ratio	0.021	-	-	-	0.25
HCM Control Delay (s)	8.1	0	-	-	14.7
HCM Lane LOS	A	A	-	-	B
HCM 95th %tile Q(veh)	0.1	-	-	-	1

Lane Group	EBT	EBR	WBL	WBT	NBL	NBR
Lane Configurations						
Traffic Volume (vph)	51	13	157	407	0	54
Future Volume (vph)	51	13	157	407	0	54
Ideal Flow (vphpl)	1900	1900	1900	1900	1900	1900
Lane Util. Factor	1.00	1.00	1.00	1.00	1.00	1.00
Frt	0.973				0.865	
Flt Protected				0.986		
Satd. Flow (prot)	1812	0	0	1837	1611	0
Flt Permitted				0.986		
Satd. Flow (perm)	1812	0	0	1837	1611	0
Link Speed (k/h)	50			50	50	
Link Distance (m)	150.6			119.9	110.4	
Travel Time (s)	10.8			8.6	7.9	
Peak Hour Factor	0.92	0.92	0.92	0.92	0.92	0.92
Adj. Flow (vph)	55	14	171	442	0	59
Shared Lane Traffic (%)						
Lane Group Flow (vph)	69	0	0	613	59	0
Sign Control	Free			Free	Stop	

Intersection Summary		
Area Type:	Other	
Control Type: Unsignalized		
Intersection Capacity Utilization 46.8%		ICU Level of Service A
Analysis Period (min) 15		

Intersection	
Int Delay, s/veh	2.4

Movement	EBT	EBR	WBL	WBT	NBL	NBR
Lane Configurations						
Traffic Vol, veh/h	51	13	157	407	0	54
Future Vol, veh/h	51	13	157	407	0	54
Conflicting Peds, #/hr	0	0	0	0	0	0
Sign Control	Free	Free	Free	Free	Stop	Stop
RT Channelized	-	None	-	None	-	None
Storage Length	-	-	-	-	0	-
Veh in Median Storage, #	0	-	-	0	0	-
Grade, %	0	-	-	0	0	-
Peak Hour Factor	92	92	92	92	92	92
Heavy Vehicles, %	2	2	2	2	2	2
Mvmt Flow	55	14	171	442	0	59

Major/Minor	Major1		Major2		Minor1	
Conflicting Flow All	0	0	69	0	846	62
Stage 1	-	-	-	-	62	-
Stage 2	-	-	-	-	784	-
Critical Hdwy	-	-	4.12	-	6.42	6.22
Critical Hdwy Stg 1	-	-	-	-	5.42	-
Critical Hdwy Stg 2	-	-	-	-	5.42	-
Follow-up Hdwy	-	-	2.218	-	3.518	3.318
Pot Cap-1 Maneuver	-	-	1532	-	333	1003
Stage 1	-	-	-	-	961	-
Stage 2	-	-	-	-	450	-
Platoon blocked, %	-	-		-		
Mov Cap-1 Maneuver	-	-	1532	-	284	1003
Mov Cap-2 Maneuver	-	-	-	-	284	-
Stage 1	-	-	-	-	961	-
Stage 2	-	-	-	-	383	-

Approach	EB	WB	NB
HCM Control Delay, s	0	2.1	8.8
HCM LOS			A

Minor Lane/Major Mvmt	NBLn1	EBT	EBR	WBL	WBT
Capacity (veh/h)	1003	-	-	1532	-
HCM Lane V/C Ratio	0.059	-	-	0.111	-
HCM Control Delay (s)	8.8	-	-	7.6	0
HCM Lane LOS	A	-	-	A	A
HCM 95th %tile Q(veh)	0.2	-	-	0.4	-

Lane Group	EBT	EBR	WBL	WBT	NBL	NBR
Lane Configurations						
Traffic Volume (vph)	105	0	84	564	0	100
Future Volume (vph)	105	0	84	564	0	100
Ideal Flow (vphpl)	1900	1900	1900	1900	1900	1900
Lane Util. Factor	1.00	1.00	1.00	1.00	1.00	1.00
Frt					0.865	
Flt Protected				0.994		
Satd. Flow (prot)	1863	0	0	1852	1611	0
Flt Permitted				0.994		
Satd. Flow (perm)	1863	0	0	1852	1611	0
Link Speed (k/h)	50			50	50	
Link Distance (m)	119.9			127.6	107.7	
Travel Time (s)	8.6			9.2	7.8	
Peak Hour Factor	0.92	0.92	0.92	0.92	0.92	0.92
Adj. Flow (vph)	114	0	91	613	0	109
Shared Lane Traffic (%)						
Lane Group Flow (vph)	114	0	0	704	109	0
Sign Control	Free			Free	Stop	

Intersection Summary		
Area Type:	Other	
Control Type: Unsignalized		
Intersection Capacity Utilization 53.9%		ICU Level of Service A
Analysis Period (min) 15		

Intersection	
Int Delay, s/veh	1.8

Movement	EBT	EBR	WBL	WBT	NBL	NBR
Lane Configurations						
Traffic Vol, veh/h	105	0	84	564	0	100
Future Vol, veh/h	105	0	84	564	0	100
Conflicting Peds, #/hr	0	0	0	0	0	0
Sign Control	Free	Free	Free	Free	Stop	Stop
RT Channelized	-	None	-	None	-	None
Storage Length	-	-	-	-	0	-
Veh in Median Storage, #	0	-	-	0	0	-
Grade, %	0	-	-	0	0	-
Peak Hour Factor	92	92	92	92	92	92
Heavy Vehicles, %	2	2	2	2	2	2
Mvmt Flow	114	0	91	613	0	109

Major/Minor	Major1		Major2		Minor1	
Conflicting Flow All	0	0	114	0	909	114
Stage 1	-	-	-	-	114	-
Stage 2	-	-	-	-	795	-
Critical Hdwy	-	-	4.12	-	6.42	6.22
Critical Hdwy Stg 1	-	-	-	-	5.42	-
Critical Hdwy Stg 2	-	-	-	-	5.42	-
Follow-up Hdwy	-	-	2.218	-	3.518	3.318
Pot Cap-1 Maneuver	-	-	1475	-	305	939
Stage 1	-	-	-	-	911	-
Stage 2	-	-	-	-	445	-
Platoon blocked, %	-	-		-		
Mov Cap-1 Maneuver	-	-	1475	-	276	939
Mov Cap-2 Maneuver	-	-	-	-	276	-
Stage 1	-	-	-	-	911	-
Stage 2	-	-	-	-	403	-

Approach	EB	WB	NB
HCM Control Delay, s	0	1	9.3
HCM LOS			A

Minor Lane/Major Mvmt	NBLn1	EBT	EBR	WBL	WBT
Capacity (veh/h)	939	-	-	1475	-
HCM Lane V/C Ratio	0.116	-	-	0.062	-
HCM Control Delay (s)	9.3	-	-	7.6	0
HCM Lane LOS	A	-	-	A	A
HCM 95th %tile Q(veh)	0.4	-	-	0.2	-

Lane Group	EBT	EBR	WBL	WBT	NBL	NBR
Lane Configurations						
Traffic Volume (vph)	505	53	0	438	0	155
Future Volume (vph)	505	53	0	438	0	155
Ideal Flow (vphpl)	1900	1900	1900	1900	1900	1900
Lane Util. Factor	1.00	1.00	1.00	1.00	1.00	1.00
Frt	0.987					0.865
Flt Protected						
Satd. Flow (prot)	1839	0	0	1863	0	1611
Flt Permitted						
Satd. Flow (perm)	1839	0	0	1863	0	1611
Link Speed (k/h)	50			50	50	
Link Distance (m)	197.3			405.7	303.8	
Travel Time (s)	14.2			29.2	21.9	
Peak Hour Factor	0.92	0.92	0.92	0.92	0.92	0.92
Adj. Flow (vph)	549	58	0	476	0	168
Shared Lane Traffic (%)						
Lane Group Flow (vph)	607	0	0	476	0	168
Sign Control	Free			Free	Stop	

Intersection Summary	
Area Type:	Other
Control Type: Unsignalized	
Intersection Capacity Utilization 46.1%	ICU Level of Service A
Analysis Period (min) 15	

Intersection	
Int Delay, s/veh	2.1

Movement	EBT	EBR	WBL	WBT	NBL	NBR
Lane Configurations						
Traffic Vol, veh/h	505	53	0	438	0	155
Future Vol, veh/h	505	53	0	438	0	155
Conflicting Peds, #/hr	0	0	0	0	0	0
Sign Control	Free	Free	Free	Free	Stop	Stop
RT Channelized	-	None	-	None	-	None
Storage Length	-	-	-	-	-	0
Veh in Median Storage, #	0	-	-	0	0	-
Grade, %	0	-	-	0	0	-
Peak Hour Factor	92	92	92	92	92	92
Heavy Vehicles, %	2	2	2	2	2	2
Mvmt Flow	549	58	0	476	0	168

Major/Minor	Major1		Major2		Minor1	
Conflicting Flow All	0	0	-	-	-	578
Stage 1	-	-	-	-	-	-
Stage 2	-	-	-	-	-	-
Critical Hdwy	-	-	-	-	-	6.22
Critical Hdwy Stg 1	-	-	-	-	-	-
Critical Hdwy Stg 2	-	-	-	-	-	-
Follow-up Hdwy	-	-	-	-	-	3.318
Pot Cap-1 Maneuver	-	-	0	-	0	516
Stage 1	-	-	0	-	0	-
Stage 2	-	-	0	-	0	-
Platoon blocked, %	-	-		-		
Mov Cap-1 Maneuver	-	-	-	-	-	516
Mov Cap-2 Maneuver	-	-	-	-	-	-
Stage 1	-	-	-	-	-	-
Stage 2	-	-	-	-	-	-

Approach	EB	WB	NB
HCM Control Delay, s	0	0	15.3
HCM LOS			C

Minor Lane/Major Mvmt	NBLn1	EBT	EBR	WBT
Capacity (veh/h)	516	-	-	-
HCM Lane V/C Ratio	0.327	-	-	-
HCM Control Delay (s)	15.3	-	-	-
HCM Lane LOS	C	-	-	-
HCM 95th %tile Q(veh)	1.4	-	-	-

Lane Group	EBL	EBT	EBR	WBL	WBT	WBR	NBL	NBT	NBR	SBL	SBT	SBR
Lane Configurations												
Traffic Volume (vph)	44	499	118	160	277	60	103	189	172	50	196	59
Future Volume (vph)	44	499	118	160	277	60	103	189	172	50	196	59
Ideal Flow (vphpl)	1900	1900	1900	1900	1900	1900	1900	1900	1900	1900	1900	1900
Storage Length (m)	70.0		70.0	120.0		0.0	55.0		0.0	55.0		0.0
Storage Lanes	1		1	1		0	1		0	1		0
Taper Length (m)	100.0			100.0			100.0			100.0		
Lane Util. Factor	1.00	1.00	1.00	1.00	1.00	1.00	1.00	1.00	1.00	1.00	1.00	1.00
Frt			0.850		0.973			0.928			0.965	
Flt Protected	0.950			0.950			0.950			0.950		
Satd. Flow (prot)	1626	1863	1615	1719	1687	0	1736	1619	0	1687	1780	0
Flt Permitted	0.543			0.251			0.480			0.303		
Satd. Flow (perm)	929	1863	1615	454	1687	0	877	1619	0	538	1780	0
Right Turn on Red			Yes			Yes			Yes			Yes
Satd. Flow (RTOR)			128		18			47			15	
Link Speed (k/h)		50			50			80			50	
Link Distance (m)		405.7			474.4			304.1			233.9	
Travel Time (s)		29.2			34.2			13.7			16.8	
Peak Hour Factor	0.92	0.92	0.92	0.92	0.92	0.92	0.92	0.92	0.92	0.92	0.92	0.92
Heavy Vehicles (%)	11%	2%	0%	5%	5%	31%	4%	17%	0%	7%	0%	13%
Adj. Flow (vph)	48	542	128	174	301	65	112	205	187	54	213	64
Shared Lane Traffic (%)												
Lane Group Flow (vph)	48	542	128	174	366	0	112	392	0	54	277	0
Turn Type	Perm	NA	Perm	pm+pt	NA		Perm	NA		Perm	NA	
Protected Phases		2		1	6			8			4	
Permitted Phases	2		2	6			8			4		
Detector Phase	2	2	2	1	6		8	8		4	4	
Switch Phase												
Minimum Initial (s)	20.0	20.0	20.0	5.0	20.0		10.0	10.0		10.0	10.0	
Minimum Split (s)	36.0	36.0	36.0	8.0	36.0		29.0	29.0		29.0	29.0	
Total Split (s)	52.0	52.0	52.0	12.0	64.0		36.0	36.0		36.0	36.0	
Total Split (%)	52.0%	52.0%	52.0%	12.0%	64.0%		36.0%	36.0%		36.0%	36.0%	
Maximum Green (s)	45.0	45.0	45.0	9.0	57.0		30.0	30.0		30.0	30.0	
Yellow Time (s)	5.4	5.4	5.4	3.0	5.4		4.1	4.1		4.1	4.1	
All-Red Time (s)	1.6	1.6	1.6	0.0	1.6		1.9	1.9		1.9	1.9	
Lost Time Adjust (s)	0.0	0.0	0.0	0.0	0.0		0.0	0.0		0.0	0.0	
Total Lost Time (s)	7.0	7.0	7.0	3.0	7.0		6.0	6.0		6.0	6.0	
Lead/Lag	Lag	Lag	Lag	Lead								
Lead-Lag Optimize?	Yes	Yes	Yes	Yes								
Vehicle Extension (s)	4.5	4.5	4.5	2.0	4.5		3.0	3.0		3.0	3.0	
Recall Mode	Min	Min	Min	None	Min		None	None		None	None	
Walk Time (s)	17.0	17.0	17.0		17.0		12.0	12.0		12.0	12.0	
Flash Dont Walk (s)	12.0	12.0	12.0		12.0		7.0	7.0		7.0	7.0	
Pedestrian Calls (#/hr)	0	0	0		0		0	0		0	0	
Act Effct Green (s)	31.2	31.2	31.2	46.4	42.2		21.9	21.9		21.9	21.9	
Actuated g/C Ratio	0.40	0.40	0.40	0.60	0.54		0.28	0.28		0.28	0.28	
v/c Ratio	0.13	0.73	0.18	0.44	0.40		0.46	0.80		0.36	0.54	
Control Delay	17.0	26.9	3.9	11.4	11.8		32.2	37.7		32.7	28.1	
Queue Delay	0.0	0.0	0.0	0.0	0.0		0.0	0.0		0.0	0.0	

Lane Group	EBL	EBT	EBR	WBL	WBT	WBR	NBL	NBT	NBR	SBL	SBT	SBR
Total Delay	17.0	26.9	3.9	11.4	11.8		32.2	37.7		32.7	28.1	
LOS	B	C	A	B	B		C	D		C	C	
Approach Delay		22.1			11.7			36.4			28.9	
Approach LOS		C			B			D			C	
Queue Length 50th (m)	4.7	70.0	0.0	11.1	29.2		14.1	49.2		6.6	33.8	
Queue Length 95th (m)	12.7	120.9	10.1	23.9	56.0		35.4	#103.7		20.6	69.7	
Internal Link Dist (m)		381.7			450.4			280.1			209.9	
Turn Bay Length (m)	70.0		70.0	120.0			55.0			55.0		
Base Capacity (vph)	565	1133	1032	424	1285		356	684		218	731	
Starvation Cap Reductn	0	0	0	0	0		0	0		0	0	
Spillback Cap Reductn	0	0	0	0	0		0	0		0	0	
Storage Cap Reductn	0	0	0	0	0		0	0		0	0	
Reduced v/c Ratio	0.08	0.48	0.12	0.41	0.28		0.31	0.57		0.25	0.38	

Intersection Summary

Area Type: Other
Cycle Length: 100
Actuated Cycle Length: 77.8
Natural Cycle: 75
Control Type: Semi Act-Uncoord
Maximum v/c Ratio: 0.80
Intersection Signal Delay: 23.9 — Intersection LOS: C
Intersection Capacity Utilization 85.4% — ICU Level of Service E
Analysis Period (min) 15
95th percentile volume exceeds capacity, queue may be longer.
Queue shown is maximum after two cycles.

Splits and Phases: 2: 28th Avenue & 16th Street

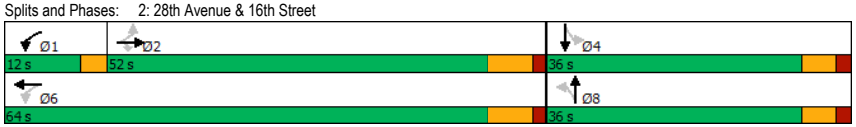

Movement	EBL	EBT	EBR	WBL	WBT	WBR	NBL	NBT	NBR	SBL	SBT	SBR
Lane Configurations												
Traffic Volume (veh/h)	44	499	118	160	277	60	103	189	172	50	196	59
Future Volume (veh/h)	44	499	118	160	277	60	103	189	172	50	196	59
Initial Q (Qb), veh	0	0	0	0	0	0	0	0	0	0	0	0
Ped-Bike Adj(A_pbT)	1.00		1.00	1.00		1.00	1.00		1.00	1.00		1.00
Parking Bus, Adj	1.00	1.00	1.00	1.00	1.00	1.00	1.00	1.00	1.00	1.00	1.00	1.00
Work Zone On Approach		No			No			No			No	
Adj Sat Flow, veh/h/ln	1737	1870	1900	1826	1826	1441	1841	1648	1900	1796	1900	1707
Adj Flow Rate, veh/h	48	542	128	174	301	65	112	205	187	54	213	64
Peak Hour Factor	0.92	0.92	0.92	0.92	0.92	0.92	0.92	0.92	0.92	0.92	0.92	0.92
Percent Heavy Veh, %	11	2	0	5	5	31	4	17	0	7	0	13
Cap, veh/h	448	722	622	335	736	159	317	260	237	181	459	138
Arrive On Green	0.39	0.39	0.39	0.08	0.51	0.51	0.33	0.33	0.33	0.33	0.33	0.33
Sat Flow, veh/h	943	1870	1610	1739	1455	314	1085	794	724	953	1403	421
Grp Volume(v), veh/h	48	542	128	174	0	366	112	0	392	54	0	277
Grp Sat Flow(s),veh/h/ln	943	1870	1610	1739	0	1769	1085	0	1518	953	0	1824
Q Serve(g_s), s	2.6	19.6	4.1	4.4	0.0	10.1	7.1	0.0	18.3	4.3	0.0	9.4
Cycle Q Clear(g_c), s	3.3	19.6	4.1	4.4	0.0	10.1	16.5	0.0	18.3	22.5	0.0	9.4
Prop In Lane	1.00		1.00	1.00		0.18	1.00		0.48	1.00		0.23
Lane Grp Cap(c), veh/h	448	722	622	335	0	895	317	0	497	181	0	597
V/C Ratio(X)	0.11	0.75	0.21	0.52	0.00	0.41	0.35	0.00	0.79	0.30	0.00	0.46
Avail Cap(c_a), veh/h	628	1078	928	394	0	1292	378	0	583	235	0	701
HCM Platoon Ratio	1.00	1.00	1.00	1.00	1.00	1.00	1.00	1.00	1.00	1.00	1.00	1.00
Upstream Filter(I)	1.00	1.00	1.00	1.00	0.00	1.00	1.00	0.00	1.00	1.00	0.00	1.00
Uniform Delay (d), s/veh	16.0	20.7	16.0	15.0	0.0	12.0	27.4	0.0	23.8	34.0	0.0	20.8
Incr Delay (d2), s/veh	0.2	2.7	0.3	0.5	0.0	0.5	0.7	0.0	6.2	0.9	0.0	0.6
Initial Q Delay(d3),s/veh	0.0	0.0	0.0	0.0	0.0	0.0	0.0	0.0	0.0	0.0	0.0	0.0
%ile BackOfQ(50%),veh/ln	0.2	2.7	0.4	0.1	0.0	0.2	0.8	0.0	2.6	0.6	0.0	1.4
Unsig. Movement Delay, s/veh												
LnGrp Delay(d),s/veh	16.1	23.4	16.3	15.5	0.0	12.5	28.0	0.0	30.0	34.9	0.0	21.4
LnGrp LOS	B	C	B	B	A	B	C	A	C	C	A	C
Approach Vol, veh/h		718			540			504			331	
Approach Delay, s/veh		21.7			13.5			29.5			23.6	
Approach LOS		C			B			C			C	

Timer - Assigned Phs	1	2		4		6		8
Phs Duration (G+Y+Rc), s	9.4	37.1		31.6		46.5		31.6
Change Period (Y+Rc), s	3.0	* 7		* 6		* 7		* 6
Max Green Setting (Gmax), s	9.0	* 45		* 30		* 57		* 30
Max Q Clear Time (g_c+I1), s	6.4	21.6		24.5		12.1		20.3
Green Ext Time (p_c), s	0.1	8.6		1.0		5.2		2.5

Intersection Summary		
HCM 6th Ctrl Delay		21.8
HCM 6th LOS		C

Notes

* HCM 6th computational engine requires equal clearance times for the phases crossing the barrier.

Lane Group	EBL	EBR	NBL	NBT	SBT	SBR
Lane Configurations						
Traffic Volume (vph)	122	343	147	340	396	82
Future Volume (vph)	122	343	147	340	396	82
Ideal Flow (vphpl)	1900	1900	1900	1900	1900	1900
Storage Length (m)	0.0	0.0	40.0			15.0
Storage Lanes	1	1	1			1
Taper Length (m)	7.5		7.5			
Lane Util. Factor	1.00	1.00	1.00	1.00	1.00	1.00
Frt		0.850				0.850
Flt Protected	0.950		0.950			
Satd. Flow (prot)	1770	1583	1770	1863	1863	1583
Flt Permitted	0.950		0.950			
Satd. Flow (perm)	1770	1583	1770	1863	1863	1583
Link Speed (k/h)	50			80	80	
Link Distance (m)	127.6			298.9	304.1	
Travel Time (s)	9.2			13.5	13.7	
Peak Hour Factor	0.92	0.92	0.92	0.92	0.92	0.92
Adj. Flow (vph)	133	373	160	370	430	89
Shared Lane Traffic (%)						
Lane Group Flow (vph)	133	373	160	370	430	89
Sign Control	Stop			Free	Free	

Intersection Summary		
Area Type:	Other	
Control Type: Unsignalized		
Intersection Capacity Utilization 48.7%		ICU Level of Service A
Analysis Period (min) 15		

Intersection	
Int Delay, s/veh	10.3

Movement	EBL	EBR	NBL	NBT	SBT	SBR
Lane Configurations						
Traffic Vol, veh/h	122	343	147	340	396	82
Future Vol, veh/h	122	343	147	340	396	82
Conflicting Peds, #/hr	0	0	0	0	0	0
Sign Control	Stop	Stop	Free	Free	Free	Free
RT Channelized	-	None	-	None	-	None
Storage Length	0	0	40	-	-	15
Veh in Median Storage, #	0	-	-	0	0	-
Grade, %	0	-	-	0	0	-
Peak Hour Factor	92	92	92	92	92	92
Heavy Vehicles, %	2	2	2	2	2	2
Mvmt Flow	133	373	160	370	430	89

Major/Minor	Minor2		Major1		Major2	
Conflicting Flow All	1120	430	519	0	-	0
Stage 1	430	-	-	-	-	-
Stage 2	690	-	-	-	-	-
Critical Hdwy	6.42	6.22	4.12	-	-	-
Critical Hdwy Stg 1	5.42	-	-	-	-	-
Critical Hdwy Stg 2	5.42	-	-	-	-	-
Follow-up Hdwy	3.518	3.318	2.218	-	-	-
Pot Cap-1 Maneuver	228	625	1047	-	-	-
Stage 1	656	-	-	-	-	-
Stage 2	498	-	-	-	-	-
Platoon blocked, %				-	-	-
Mov Cap-1 Maneuver	193	625	1047	-	-	-
Mov Cap-2 Maneuver	193	-	-	-	-	-
Stage 1	556	-	-	-	-	-
Stage 2	498	-	-	-	-	-

Approach	EB	NB	SB
HCM Control Delay, s	28.8	2.7	0
HCM LOS	D		

Minor Lane/Major Mvmt	NBL	NBT	EBLn1	EBLn2	SBT	SBR
Capacity (veh/h)	1047	-	193	625	-	-
HCM Lane V/C Ratio	0.153	-	0.687	0.597	-	-
HCM Control Delay (s)	9.1	-	56.8	18.9	-	-
HCM Lane LOS	A	-	F	C	-	-
HCM 95th %tile Q(veh)	0.5	-	4.2	3.9	-	-

Lane Group	EBL	EBR	NBL	NBT	SBT	SBR
Lane Configurations						
Traffic Volume (vph)	98	4	6	389	551	188
Future Volume (vph)	98	4	6	389	551	188
Ideal Flow (vphpl)	1900	1900	1900	1900	1900	1900
Lane Util. Factor	1.00	1.00	1.00	1.00	1.00	1.00
Frt		0.850			0.966	
Flt Protected	0.950			0.999		
Satd. Flow (prot)	1770	1583	0	1861	1799	0
Flt Permitted	0.950			0.999		
Satd. Flow (perm)	1770	1583	0	1861	1799	0
Link Speed (k/h)	50			80	80	
Link Distance (m)	308.0			256.5	298.9	
Travel Time (s)	22.2			11.5	13.5	
Peak Hour Factor	0.92	0.92	0.92	0.92	0.92	0.92
Adj. Flow (vph)	107	4	7	423	599	204
Shared Lane Traffic (%)						
Lane Group Flow (vph)	107	4	0	430	803	0
Sign Control	Stop			Free	Free	

Intersection Summary		
Area Type:	Other	
Control Type: Unsignalized		
Intersection Capacity Utilization 52.5%		ICU Level of Service A
Analysis Period (min) 15		

Intersection	
Int Delay, s/veh	2.9

Movement	EBL	EBR	NBL	NBT	SBT	SBR
Lane Configurations						
Traffic Vol, veh/h	98	4	6	389	551	188
Future Vol, veh/h	98	4	6	389	551	188
Conflicting Peds, #/hr	0	0	0	0	0	0
Sign Control	Stop	Stop	Free	Free	Free	Free
RT Channelized	-	None	-	None	-	None
Storage Length	0	0	-	-	-	-
Veh in Median Storage, #	0	-	-	0	0	-
Grade, %	0	-	-	0	0	-
Peak Hour Factor	92	92	92	92	92	92
Heavy Vehicles, %	2	2	2	2	2	2
Mvmt Flow	107	4	7	423	599	204

Major/Minor	Minor2		Major1		Major2	
Conflicting Flow All	1138	701	803	0	-	0
Stage 1	701	-	-	-	-	-
Stage 2	437	-	-	-	-	-
Critical Hdwy	6.42	6.22	4.12	-	-	-
Critical Hdwy Stg 1	5.42	-	-	-	-	-
Critical Hdwy Stg 2	5.42	-	-	-	-	-
Follow-up Hdwy	3.518	3.318	2.218	-	-	-
Pot Cap-1 Maneuver	223	439	821	-	-	-
Stage 1	492	-	-	-	-	-
Stage 2	651	-	-	-	-	-
Platoon blocked, %				-	-	-
Mov Cap-1 Maneuver	221	439	821	-	-	-
Mov Cap-2 Maneuver	221	-	-	-	-	-
Stage 1	487	-	-	-	-	-
Stage 2	651	-	-	-	-	-

Approach	EB	NB	SB
HCM Control Delay, s	34.7	0.1	0
HCM LOS	D		

Minor Lane/Major Mvmt	NBL	NBT	EBLn1	EBLn2	SBT	SBR
Capacity (veh/h)	821	-	221	439	-	-
HCM Lane V/C Ratio	0.008	-	0.482	0.01	-	-
HCM Control Delay (s)	9.4	0	35.6	13.3	-	-
HCM Lane LOS	A	A	E	B	-	-
HCM 95th %tile Q(veh)	0	-	2.4	0	-	-

Lane Group	EBL	EBR	NBL	NBT	SBT	SBR
Lane Configurations						
Traffic Volume (vph)	288	58	36	108	220	334
Future Volume (vph)	288	58	36	108	220	334
Ideal Flow (vphpl)	1900	1900	1900	1900	1900	1900
Storage Length (m)	0.0	20.0	0.0			0.0
Storage Lanes	1	1	0			0
Taper Length (m)	7.5		7.5			
Lane Util. Factor	1.00	1.00	1.00	1.00	1.00	1.00
Frt		0.850			0.919	
Flt Protected	0.950			0.988		
Satd. Flow (prot)	1805	1615	0	1699	1722	0
Flt Permitted	0.950			0.988		
Satd. Flow (perm)	1805	1615	0	1699	1722	0
Link Speed (k/h)	80			60	80	
Link Distance (m)	310.5			265.1	256.5	
Travel Time (s)	14.0			15.9	11.5	
Peak Hour Factor	0.92	0.92	0.92	0.92	0.92	0.92
Heavy Vehicles (%)	0%	0%	0%	14%	2%	1%
Adj. Flow (vph)	313	63	39	117	239	363
Shared Lane Traffic (%)						
Lane Group Flow (vph)	313	63	0	156	602	0
Sign Control	Stop			Free	Free	

Intersection Summary			
Area Type:	Other		
Control Type: Unsignalized			
Intersection Capacity Utilization 59.7%			ICU Level of Service B
Analysis Period (min) 15			

Intersection	
Int Delay, s/veh	9.3

Movement	EBL	EBR	NBL	NBT	SBT	SBR
Lane Configurations						
Traffic Vol, veh/h	288	58	36	108	220	334
Future Vol, veh/h	288	58	36	108	220	334
Conflicting Peds, #/hr	0	0	0	0	0	0
Sign Control	Stop	Stop	Free	Free	Free	Free
RT Channelized	-	None	-	None	-	Yield
Storage Length	0	20	-	-	-	-
Veh in Median Storage, #	0	-	-	0	0	-
Grade, %	0	-	-	0	0	-
Peak Hour Factor	92	92	92	92	92	92
Heavy Vehicles, %	0	0	0	14	2	1
Mvmt Flow	313	63	39	117	239	363

Major/Minor	Minor2		Major1		Major2	
Conflicting Flow All	616	421	239	0	-	0
Stage 1	421	-	-	-	-	-
Stage 2	195	-	-	-	-	-
Critical Hdwy	6.4	6.2	4.1	-	-	-
Critical Hdwy Stg 1	5.4	-	-	-	-	-
Critical Hdwy Stg 2	5.4	-	-	-	-	-
Follow-up Hdwy	3.5	3.3	2.2	-	-	-
Pot Cap-1 Maneuver	457	637	1340	-	-	-
Stage 1	667	-	-	-	-	-
Stage 2	843	-	-	-	-	-
Platoon blocked, %				-	-	-
Mov Cap-1 Maneuver	443	637	1340	-	-	-
Mov Cap-2 Maneuver	443	-	-	-	-	-
Stage 1	646	-	-	-	-	-
Stage 2	843	-	-	-	-	-

Approach	EB	NB	SB
HCM Control Delay, s	27.2	1.9	0
HCM LOS	D		

Minor Lane/Major Mvmt	NBL	NBT	EBLn1	EBLn2	SBT	SBR
Capacity (veh/h)	1340	-	443	637	-	-
HCM Lane V/C Ratio	0.029	-	0.707	0.099	-	-
HCM Control Delay (s)	7.8	0	30.4	11.3	-	-
HCM Lane LOS	A	A	D	B	-	-
HCM 95th %tile Q(veh)	0.1	-	5.4	0.3	-	-

Lane Group	EBL	EBT	WBT	WBR	SBL	SBR
Lane Configurations						
Traffic Volume (vph)	67	317	363	7	29	43
Future Volume (vph)	67	317	363	7	29	43
Ideal Flow (vphpl)	1900	1900	1900	1900	1900	1900
Lane Util. Factor	1.00	1.00	1.00	1.00	1.00	1.00
Frt			0.997		0.920	
Flt Protected		0.991			0.980	
Satd. Flow (prot)	0	1846	1857	0	1679	0
Flt Permitted		0.991			0.980	
Satd. Flow (perm)	0	1846	1857	0	1679	0
Link Speed (k/h)		80	80		50	
Link Distance (m)		166.5	310.5		252.9	
Travel Time (s)		7.5	14.0		18.2	
Peak Hour Factor	0.92	0.92	0.92	0.92	0.92	0.92
Adj. Flow (vph)	73	345	395	8	32	47
Shared Lane Traffic (%)						
Lane Group Flow (vph)	0	418	403	0	79	0
Sign Control		Free	Free		Stop	

Intersection Summary			
Area Type:	Other		
Control Type: Unsignalized			
Intersection Capacity Utilization 54.2%		ICU Level of Service A	
Analysis Period (min) 15			

Intersection	
Int Delay, s/veh	2

Movement	EBL	EBT	WBT	WBR	SBL	SBR
Lane Configurations						
Traffic Vol, veh/h	67	317	363	7	29	43
Future Vol, veh/h	67	317	363	7	29	43
Conflicting Peds, #/hr	0	0	0	0	0	0
Sign Control	Free	Free	Free	Free	Stop	Stop
RT Channelized	-	None	-	None	-	None
Storage Length	-	-	-	-	0	-
Veh in Median Storage, #	-	0	0	-	0	-
Grade, %	-	0	0	-	0	-
Peak Hour Factor	92	92	92	92	92	92
Heavy Vehicles, %	2	2	2	2	2	2
Mvmt Flow	73	345	395	8	32	47

Major/Minor	Major1		Major2		Minor2	
Conflicting Flow All	403	0	-	0	890	399
Stage 1	-	-	-	-	399	-
Stage 2	-	-	-	-	491	-
Critical Hdwy	4.12	-	-	-	6.42	6.22
Critical Hdwy Stg 1	-	-	-	-	5.42	-
Critical Hdwy Stg 2	-	-	-	-	5.42	-
Follow-up Hdwy	2.218	-	-	-	3.518	3.318
Pot Cap-1 Maneuver	1156	-	-	-	313	651
Stage 1	-	-	-	-	678	-
Stage 2	-	-	-	-	615	-
Platoon blocked, %		-	-	-		
Mov Cap-1 Maneuver	1156	-	-	-	289	651
Mov Cap-2 Maneuver	-	-	-	-	289	-
Stage 1	-	-	-	-	625	-
Stage 2	-	-	-	-	615	-

Approach	EB	WB	SB
HCM Control Delay, s	1.5	0	15.1
HCM LOS			C

Minor Lane/Major Mvmt	EBL	EBT	WBT	WBR	SBLn1
Capacity (veh/h)	1156	-	-	-	433
HCM Lane V/C Ratio	0.063	-	-	-	0.181
HCM Control Delay (s)	8.3	0	-	-	15.1
HCM Lane LOS	A	A	-	-	C
HCM 95th %tile Q(veh)	0.2	-	-	-	0.7

Lane Group	EBT	EBR	WBL	WBT	NBL	NBR
Lane Configurations						
Traffic Volume (vph)	211	8	95	83	0	102
Future Volume (vph)	211	8	95	83	0	102
Ideal Flow (vphpl)	1900	1900	1900	1900	1900	1900
Lane Util. Factor	1.00	1.00	1.00	1.00	1.00	1.00
Frt	0.995				0.865	
Flt Protected				0.974		
Satd. Flow (prot)	1853	0	0	1814	1611	0
Flt Permitted				0.974		
Satd. Flow (perm)	1853	0	0	1814	1611	0
Link Speed (k/h)	50			50	50	
Link Distance (m)	150.6			119.9	110.4	
Travel Time (s)	10.8			8.6	7.9	
Peak Hour Factor	0.92	0.92	0.92	0.92	0.92	0.92
Adj. Flow (vph)	229	9	103	90	0	111
Shared Lane Traffic (%)						
Lane Group Flow (vph)	238	0	0	193	111	0
Sign Control	Free			Free	Stop	

Intersection Summary		
Area Type:	Other	
Control Type: Unsignalized		
Intersection Capacity Utilization 37.5%		ICU Level of Service A
Analysis Period (min) 15		

Intersection	
Int Delay, s/veh	3.6

Movement	EBT	EBR	WBL	WBT	NBL	NBR
Lane Configurations						
Traffic Vol, veh/h	211	8	95	83	0	102
Future Vol, veh/h	211	8	95	83	0	102
Conflicting Peds, #/hr	0	0	0	0	0	0
Sign Control	Free	Free	Free	Free	Stop	Stop
RT Channelized	-	None	-	None	-	None
Storage Length	-	-	-	-	0	-
Veh in Median Storage, #	0	-	-	0	0	-
Grade, %	0	-	-	0	0	-
Peak Hour Factor	92	92	92	92	92	92
Heavy Vehicles, %	2	2	2	2	2	2
Mvmt Flow	229	9	103	90	0	111

Major/Minor	Major1		Major2		Minor1	
Conflicting Flow All	0	0	238	0	530	234
Stage 1	-	-	-	-	234	-
Stage 2	-	-	-	-	296	-
Critical Hdwy	-	-	4.12	-	6.42	6.22
Critical Hdwy Stg 1	-	-	-	-	5.42	-
Critical Hdwy Stg 2	-	-	-	-	5.42	-
Follow-up Hdwy	-	-	2.218	-	3.518	3.318
Pot Cap-1 Maneuver	-	-	1329	-	510	805
Stage 1	-	-	-	-	805	-
Stage 2	-	-	-	-	755	-
Platoon blocked, %	-	-		-		
Mov Cap-1 Maneuver	-	-	1329	-	468	805
Mov Cap-2 Maneuver	-	-	-	-	468	-
Stage 1	-	-	-	-	805	-
Stage 2	-	-	-	-	693	-

Approach	EB	WB	NB
HCM Control Delay, s	0	4.2	10.2
HCM LOS			B

Minor Lane/Major Mvmt	NBLn1	EBT	EBR	WBL	WBT
Capacity (veh/h)	805	-	-	1329	-
HCM Lane V/C Ratio	0.138	-	-	0.078	-
HCM Control Delay (s)	10.2	-	-	7.9	0
HCM Lane LOS	B	-	-	A	A
HCM 95th %tile Q(veh)	0.5	-	-	0.3	-

Lane Group	EBT	EBR	WBL	WBT	NBL	NBR
Lane Configurations						
Traffic Volume (vph)	313	0	51	178	0	152
Future Volume (vph)	313	0	51	178	0	152
Ideal Flow (vphpl)	1900	1900	1900	1900	1900	1900
Lane Util. Factor	1.00	1.00	1.00	1.00	1.00	1.00
Frt					0.865	
Flt Protected				0.989		
Satd. Flow (prot)	1863	0	0	1842	1611	0
Flt Permitted				0.989		
Satd. Flow (perm)	1863	0	0	1842	1611	0
Link Speed (k/h)	50			50	50	
Link Distance (m)	119.9			127.6	107.7	
Travel Time (s)	8.6			9.2	7.8	
Peak Hour Factor	0.92	0.92	0.92	0.92	0.92	0.92
Adj. Flow (vph)	340	0	55	193	0	165
Shared Lane Traffic (%)						
Lane Group Flow (vph)	340	0	0	248	165	0
Sign Control	Free			Free	Stop	

Intersection Summary		
Area Type:	Other	
Control Type: Unsignalized		
Intersection Capacity Utilization 48.1%		ICU Level of Service A
Analysis Period (min) 15		

Intersection	
Int Delay, s/veh	3.2

Movement	EBT	EBR	WBL	WBT	NBL	NBR
Lane Configurations						
Traffic Vol, veh/h	313	0	51	178	0	152
Future Vol, veh/h	313	0	51	178	0	152
Conflicting Peds, #/hr	0	0	0	0	0	0
Sign Control	Free	Free	Free	Free	Stop	Stop
RT Channelized	-	None	-	None	-	None
Storage Length	-	-	-	-	0	-
Veh in Median Storage, #	0	-	-	0	0	-
Grade, %	0	-	-	0	0	-
Peak Hour Factor	92	92	92	92	92	92
Heavy Vehicles, %	2	2	2	2	2	2
Mvmt Flow	340	0	55	193	0	165

Major/Minor	Major1		Major2		Minor1	
Conflicting Flow All	0	0	340	0	643	340
Stage 1	-	-	-	-	340	-
Stage 2	-	-	-	-	303	-
Critical Hdwy	-	-	4.12	-	6.42	6.22
Critical Hdwy Stg 1	-	-	-	-	5.42	-
Critical Hdwy Stg 2	-	-	-	-	5.42	-
Follow-up Hdwy	-	-	2.218	-	3.518	3.318
Pot Cap-1 Maneuver	-	-	1219	-	438	702
Stage 1	-	-	-	-	721	-
Stage 2	-	-	-	-	749	-
Platoon blocked, %	-	-		-		
Mov Cap-1 Maneuver	-	-	1219	-	416	702
Mov Cap-2 Maneuver	-	-	-	-	416	-
Stage 1	-	-	-	-	721	-
Stage 2	-	-	-	-	711	-

Approach	EB	WB	NB
HCM Control Delay, s	0	1.8	11.7
HCM LOS			B

Minor Lane/Major Mvmt	NBLn1	EBT	EBR	WBL	WBT
Capacity (veh/h)	702	-	-	1219	-
HCM Lane V/C Ratio	0.235	-	-	0.045	-
HCM Control Delay (s)	11.7	-	-	8.1	0
HCM Lane LOS	B	-	-	A	A
HCM 95th %tile Q(veh)	0.9	-	-	0.1	-

Appendix K

2038 Maximum Yield Scenario Total Traffic Operations Reports

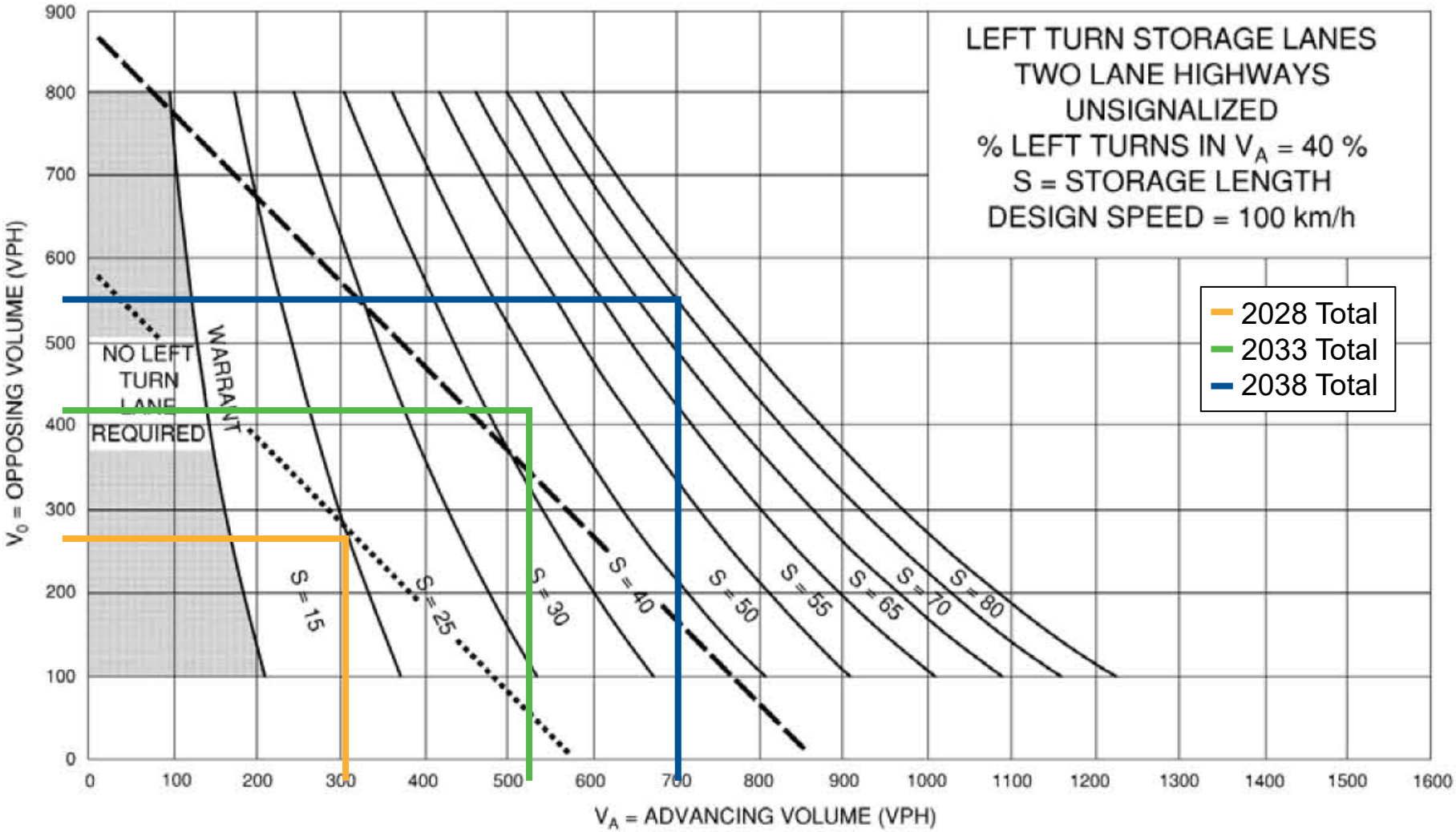

28th Avenue and Future Road (North) Northbound Left-Turn Lane, 2038 Total Traffic Conditions – AM Peak Hour

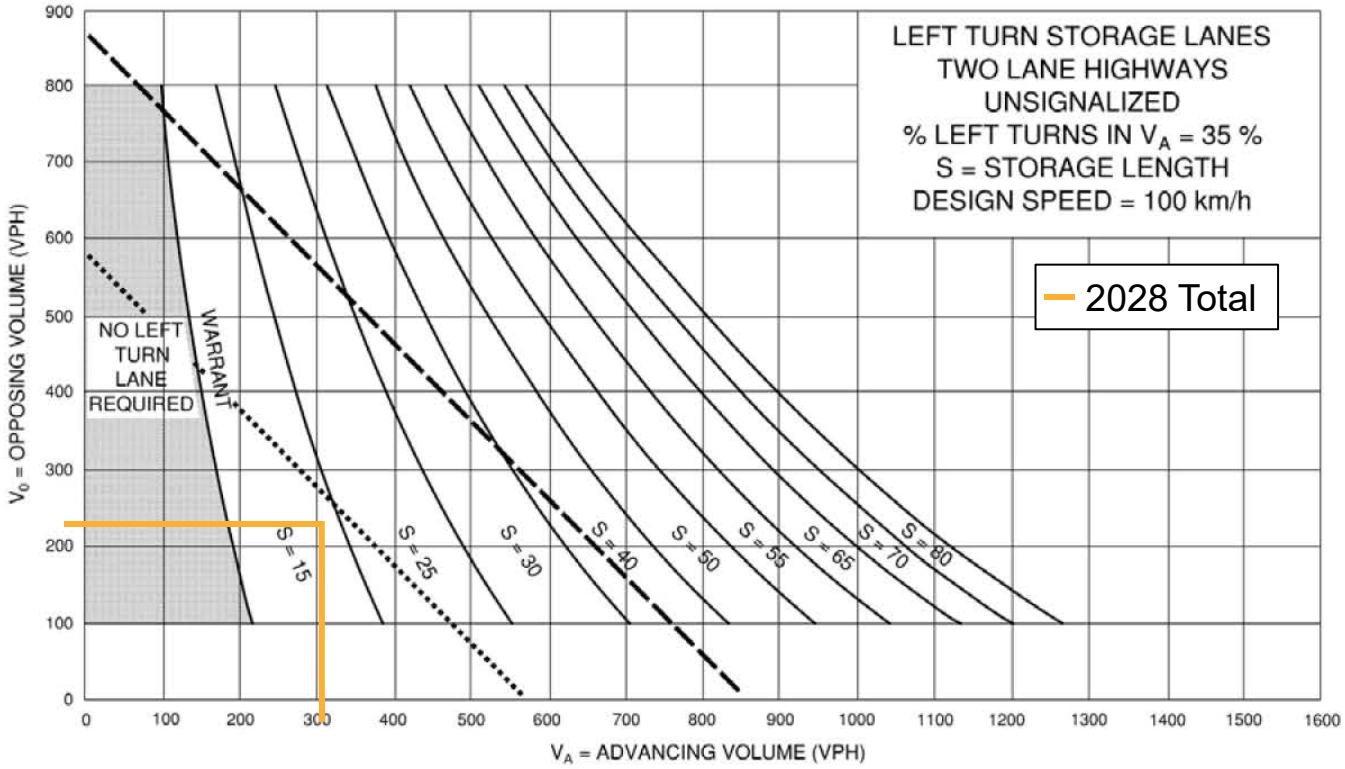

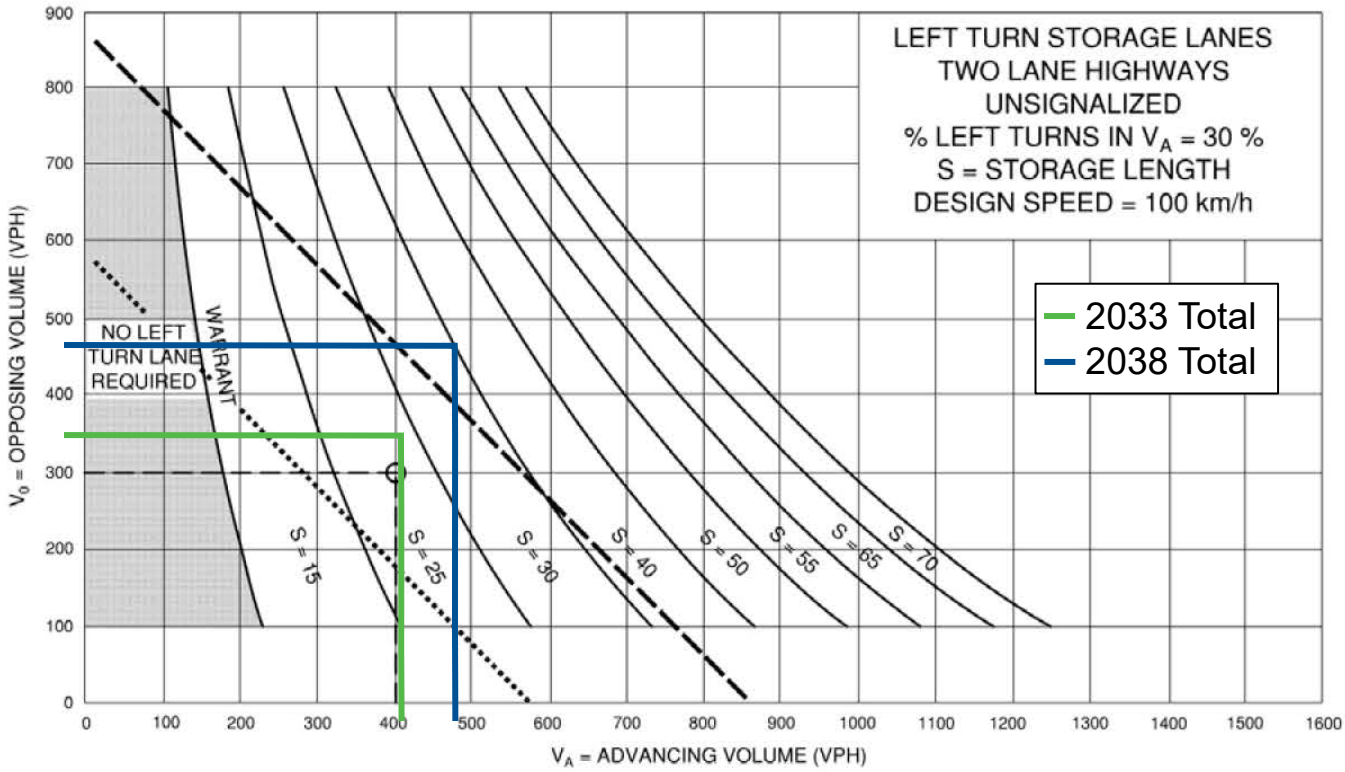

28th Avenue and Future Road (North) Northbound Left-Turn Lane 2038, Total Traffic Conditions – PM Peak Hour

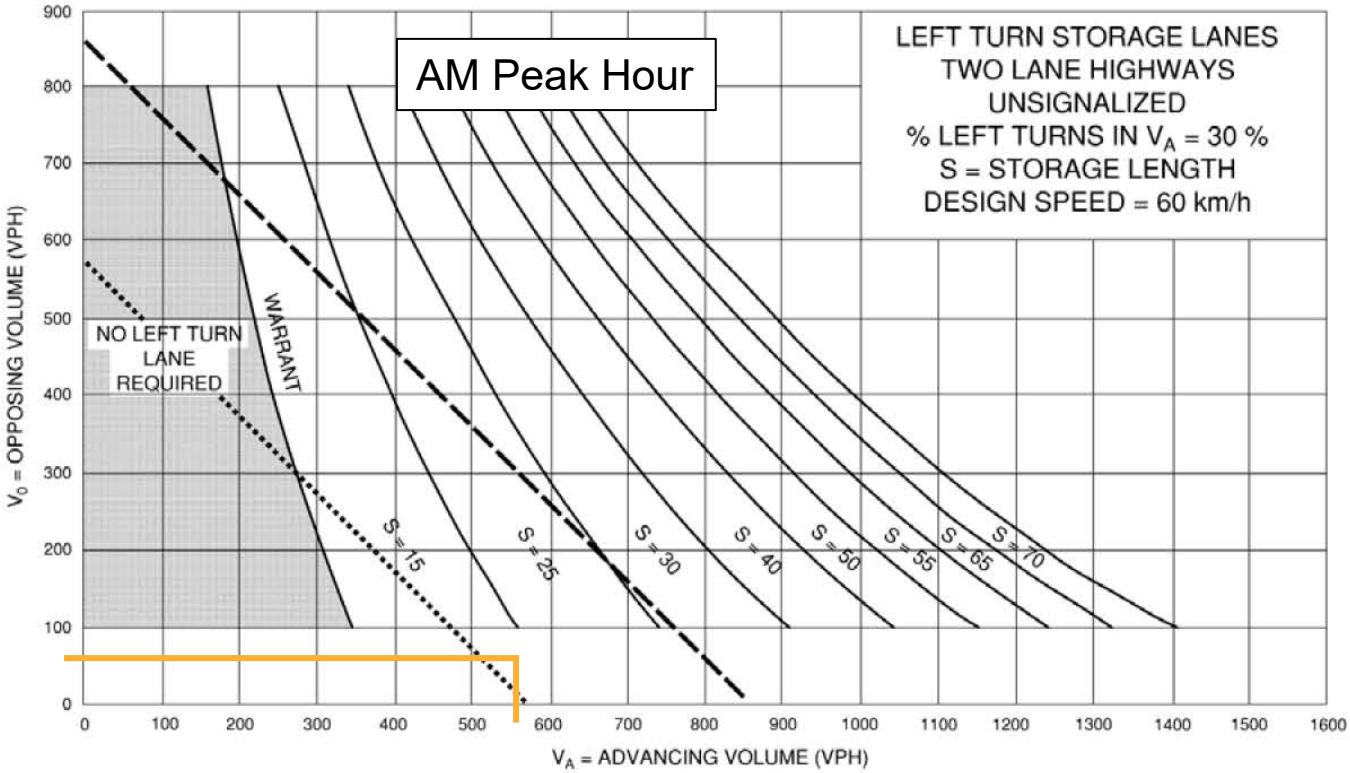

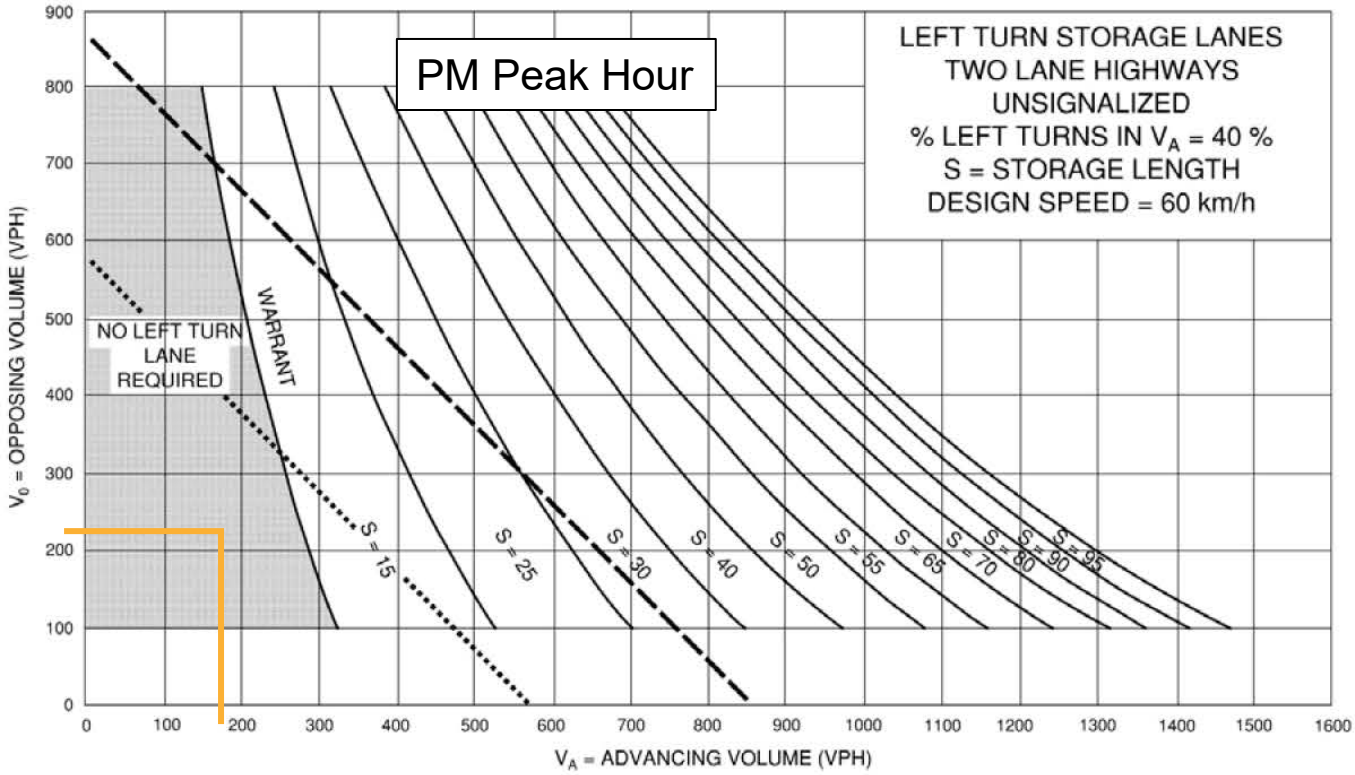

Future Road (North) and Driveway A Westbound Left-Turn Lane 2038 Total Traffic Conditions

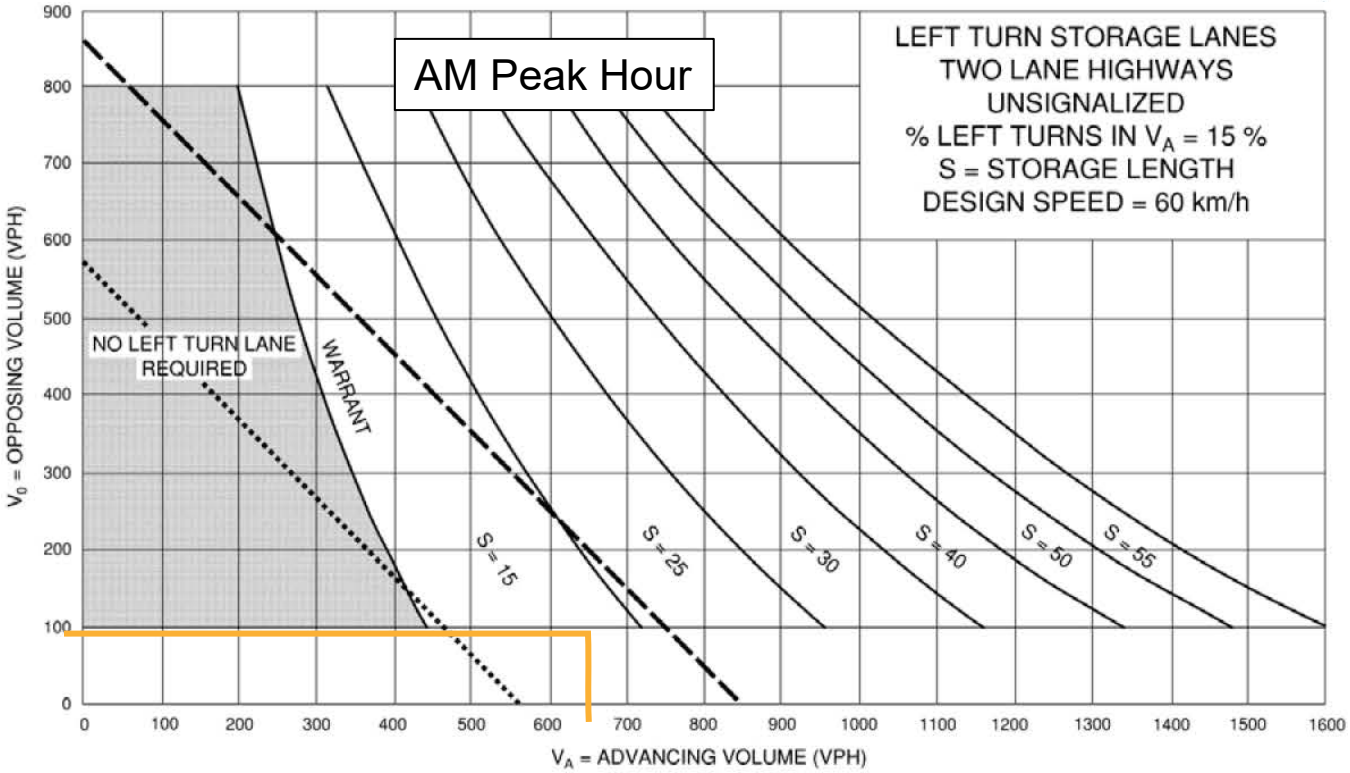

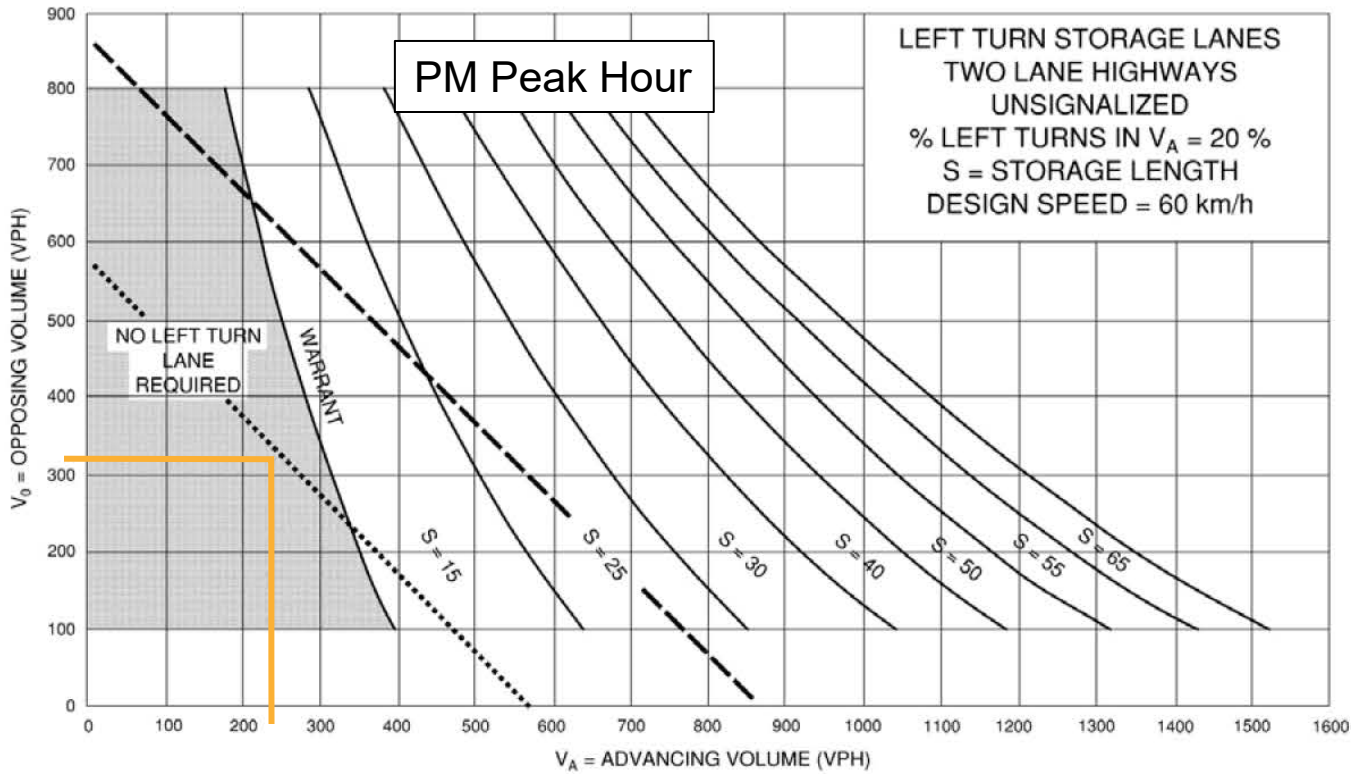

paradigm TRANSPORTATION SOLUTIONS LIMITED

Future Road (North) and Driveway B Westbound Left-Turn Lane 2038 Total Traffic Conditions

Appendix L

Left-Turn Lane Warrant Nomographs

Signal Justification Calculation for Forecast Volumes
(OTM Book 12 - Justification 7)

Horizon Year: 2038 Total Traffic Conditions
Region/City/Township: City of Owen Sound

Major Street: 28th Avenue
Minor Street: Future Road (North)

North/South?: Y

Number of Approach Lanes: 1
Tee Intersection? Y
Flow Conditions: Free

PM Forecast Only? N

Warrant Results		
150% Satisfied	No	Justification for new intersections with forecast traffic
120% Satisfied	No	Justification for existing intersections with forecast traffic

	Major Street						Minor Street						
	28th Avenue						Future Road (North)						
	Northbound			Southbound			Eastbound			Westbound			Peds Crossing
Time Period	Left	Through	Right	Left	Through	Right	Left	Through	Right	Left	Through	Right	Main Road
AM Peak Hour	371	329			276	277	75		130				0
PM Peak Hour	147	340			396	82	122		343				0
Average Hourly Volume	130	167			168	90	49		118				0

Warrant	AHV
1A - All	722
1B - Minor	168
2A - Major	555
2B - Cross	49

Warrant 1 - Minimum Vehicular Volume

1A	Approach Lanes	1		2 or more		Average Hourly Volume
	Flow Conditions	Free	Restricted	Free	Restricted	
		X				
	All Approaches	480	720	600	900	722
					% Fulfilled	150.4%

1B	Approach Lanes	1		2 or more		Average Hourly Volume
	Flow Conditions	Free	Restricted	Free	Restricted	
		X				
	Minor Street Approaches	180	255	180	255	168
					% Fulfilled	93.1%

Warrant 2 - Delay To Cross Traffic

2A	Approach Lanes	1		2 or more		Average Hourly Volume
	Flow Conditions	Free	Restricted	Free	Restricted	
		X				
	Major Street Approaches	480	720	600	900	555
					% Fulfilled	115.5%

2B	Approach Lanes	1		2 or more		Average Hourly Volume
	Flow Conditions	Free	Restricted	Free	Restricted	
		X				
	Traffic Crossing Major Street	50	75	50	75	49
					% Fulfilled	98.5%

Signal Justification Calculation for Forecast Volumes
(OTM Book 12 - Justification 7)

Horizon Year: 2038 Total Traffic Conditions
Region/City/Township: City of Owen Sound

Major Street: 28th Avenue
Minor Street: 8th Street

North/South?: Y

Number of Approach Lanes: 1
Tee Intersection? Y
Flow Conditions: Free

PM Forecast Only? N

Warrant Results		
150% Satisfied	No	Justification for new intersections with forecast traffic
120% Satisfied	No	Justification for existing intersections with forecast traffic

	Major Street						Minor Street						
	28th Avenue						8th Street						
	Northbound			Southbound			Eastbound			Westbound			Peds Crossing
Time Period	Left	Through	Right	Left	Through	Right	Left	Through	Right	Left	Through	Right	Main Road
AM Peak Hour	92	214	0	0	85	264	337	0	27	0	0	0	0
PM Peak Hour	36	108	0	0	220	334	288	0	58	0	0	0	0
Average Hourly Volume	32	81			76	150	156		21				0

Warrant	AHV
1A - All	516
1B - Minor	178
2A - Major	338
2B - Cross	156

Warrant 1 - Minimum Vehicular Volume

1A	Approach Lanes	1		2 or more		Average Hourly Volume
	Flow Conditions	Free	Restricted	Free	Restricted	
		X				
	All Approaches	480	720	600	900	516
					% Fulfilled	107.4%

1B	Approach Lanes	1		2 or more		Average Hourly Volume
	Flow Conditions	Free	Restricted	Free	Restricted	
		X				
	Minor Street Approaches	180	255	180	255	178
					% Fulfilled	98.6%

Warrant 2 - Delay To Cross Traffic

2A	Approach Lanes	1		2 or more		Average Hourly Volume
	Flow Conditions	Free	Restricted	Free	Restricted	
		X				
	Major Street Approaches	480	720	600	900	338
					% Fulfilled	70.5%

2B	Approach Lanes	1		2 or more		Average Hourly Volume
	Flow Conditions	Free	Restricted	Free	Restricted	
		X				
	Traffic Crossing Major Street	50	75	50	75	156
					% Fulfilled	312.5%

Signal Justification Calculation for Forecast Volumes
(OTM Book 12 - Justification 7)

Horizon Year: 2038 Total Traffic Conditions
Region/City/Township: City of Owen Sound

Major Street: 28th Avenue
Minor Street: Future Road (North)

North/South?: Y

Number of Approach Lanes: 1
Tee Intersection? Y
Flow Conditions: Free

PM Forecast Only? N

Warrant Results		
150% Satisfied	No	Justification for new intersections with forecast traffic
120% Satisfied	No	Justification for existing intersections with forecast traffic

	Major Street						Minor Street						
	28th Avenue						Future Road (North)						
	Northbound			Southbound			Eastbound			Westbound			Peds Crossing
Time Period	Left	Through	Right	Left	Through	Right	Left	Through	Right	Left	Through	Right	Main Road
AM Peak Hour	371	557			352	277	75		130				0
PM Peak Hour	147	484			605	82	122		343				0
Average Hourly Volume	130	260			239	90	49		118				0

Warrant	AHV
1A - All	886
1B - Minor	168
2A - Major	719
2B - Cross	49

Warrant 1 - Minimum Vehicular Volume

1A	Approach Lanes	1		2 or more		Average Hourly Volume
	Flow Conditions	Free	Restricted	Free	Restricted	
		X				
	All Approaches	480	720	600	900	886
					% Fulfilled	184.6%

1B	Approach Lanes	1		2 or more		Average Hourly Volume
	Flow Conditions	Free	Restricted	Free	Restricted	
		X				
	Minor Street Approaches	180	255	180	255	168
					% Fulfilled	93.1%

Warrant 2 - Delay To Cross Traffic

2A	Approach Lanes	1		2 or more		Average Hourly Volume
	Flow Conditions	Free	Restricted	Free	Restricted	
		X				
	Major Street Approaches	480	720	600	900	719
					% Fulfilled	149.7%

2B	Approach Lanes	1		2 or more		Average Hourly Volume
	Flow Conditions	Free	Restricted	Free	Restricted	
		X				
	Traffic Crossing Major Street	50	75	50	75	49
					% Fulfilled	98.5%

Appendix M

OTM Signal Warrant

Signal Justification Calculation for Forecast Volumes
(OTM Book 12 - Justification 7)

Horizon Year: 2038 Total Traffic Conditions
Region/City/Township: City of Owen Sound

Major Street: 28th Avenue
Minor Street: Future Road (North)

North/South?: Y

Number of Approach Lanes: 1
Tee Intersection? Y
Flow Conditions: Free

PM Forecast Only? N

Warrant Results		
150% Satisfied	No	Justification for new intersections with forecast traffic
120% Satisfied	No	Justification for existing intersections with forecast traffic

	Major Street						Minor Street						
	28th Avenue						Future Road (North)						
	Northbound			Southbound			Eastbound			Westbound			Peds Crossing
Time Period	Left	Through	Right	Left	Through	Right	Left	Through	Right	Left	Through	Right	Main Road
AM Peak Hour	371	329			276	277	75		130				0
PM Peak Hour	147	340			396	82	122		343				0
Average Hourly Volume	130	167			168	90	49		118				0

Warrant	AHV
1A - All	722
1B - Minor	168
2A - Major	555
2B - Cross	49

Warrant 1 - Minimum Vehicular Volume

1A	Approach Lanes	1		2 or more		Average Hourly Volume
	Flow Conditions	Free	Restricted	Free	Restricted	
		X				
	All Approaches	480	720	600	900	722
					% Fulfilled	150.4%

1B	Approach Lanes	1		2 or more		Average Hourly Volume
	Flow Conditions	Free	Restricted	Free	Restricted	
		X				
	Minor Street Approaches	180	255	180	255	168
					% Fulfilled	93.1%

Warrant 2 - Delay To Cross Traffic

2A	Approach Lanes	1		2 or more		Average Hourly Volume
	Flow Conditions	Free	Restricted	Free	Restricted	
		X				
	Major Street Approaches	480	720	600	900	555
					% Fulfilled	115.5%

2B	Approach Lanes	1		2 or more		Average Hourly Volume
	Flow Conditions	Free	Restricted	Free	Restricted	
		X				
	Traffic Crossing Major Street	50	75	50	75	49
					% Fulfilled	98.5%

Signal Justification Calculation for Forecast Volumes
(OTM Book 12 - Justification 7)

Horizon Year: 2038 Total Traffic Conditions
Region/City/Township: City of Owen Sound

Major Street: 28th Avenue
Minor Street: 8th Street

North/South?: Y

Number of Approach Lanes: 1
Tee Intersection? Y
Flow Conditions: Free

PM Forecast Only? N

Warrant Results		
150% Satisfied	No	Justification for new intersections with forecast traffic
120% Satisfied	No	Justification for existing intersections with forecast traffic

	Major Street						Minor Street						
	28th Avenue						8th Street						
	Northbound			Southbound			Eastbound			Westbound			Peds Crossing
Time Period	Left	Through	Right	Left	Through	Right	Left	Through	Right	Left	Through	Right	Main Road
AM Peak Hour	92	214	0	0	85	264	337	0	27	0	0	0	0
PM Peak Hour	36	108	0	0	220	334	288	0	58	0	0	0	0
Average Hourly Volume	32	81			76	150	156		21				0

Warrant	AHV
1A - All	516
1B - Minor	178
2A - Major	338
2B - Cross	156

Warrant 1 - Minimum Vehicular Volume

1A	Approach Lanes	1		2 or more		Average Hourly Volume
	Flow Conditions	Free	Restricted	Free	Restricted	
		X				
	All Approaches	480	720	600	900	516
					% Fulfilled	107.4%

1B	Approach Lanes	1		2 or more		Average Hourly Volume
	Flow Conditions	Free	Restricted	Free	Restricted	
		X				
	Minor Street Approaches	180	255	180	255	178
					% Fulfilled	98.6%

Warrant 2 - Delay To Cross Traffic

2A	Approach Lanes	1		2 or more		Average Hourly Volume
	Flow Conditions	Free	Restricted	Free	Restricted	
		X				
	Major Street Approaches	480	720	600	900	338
					% Fulfilled	70.5%

2B	Approach Lanes	1		2 or more		Average Hourly Volume
	Flow Conditions	Free	Restricted	Free	Restricted	
		X				
	Traffic Crossing Major Street	50	75	50	75	156
					% Fulfilled	312.5%

Signal Justification Calculation for Forecast Volumes
(OTM Book 12 - Justification 7)

Horizon Year: 2038 Total Traffic Conditions
Region/City/Township: City of Owen Sound

Major Street: 28th Avenue
Minor Street: Future Road (North)

North/South?: Y

Number of Approach Lanes: 1
Tee Intersection? Y
Flow Conditions: Free

PM Forecast Only? N

Warrant Results		
150% Satisfied	No	Justification for new intersections with forecast traffic
120% Satisfied	No	Justification for existing intersections with forecast traffic

	Major Street						Minor Street						
	28th Avenue						Future Road (North)						
	Northbound			Southbound			Eastbound			Westbound			Peds Crossing
Time Period	Left	Through	Right	Left	Through	Right	Left	Through	Right	Left	Through	Right	Main Road
AM Peak Hour	371	557			352	277	75		130				0
PM Peak Hour	147	484			605	82	122		343				0
Average Hourly Volume	130	260			239	90	49		118				0

Warrant	AHV
1A - All	886
1B - Minor	168
2A - Major	719
2B - Cross	49

Warrant 1 - Minimum Vehicular Volume

1A	Approach Lanes	1		2 or more		Average Hourly Volume
	Flow Conditions	Free	Restricted	Free	Restricted	
		X				
	All Approaches	480	720	600	900	886
					% Fulfilled	184.6%

1B	Approach Lanes	1		2 or more		Average Hourly Volume
	Flow Conditions	Free	Restricted	Free	Restricted	
		X				
	Minor Street Approaches	180	255	180	255	168
					% Fulfilled	93.1%

Warrant 2 - Delay To Cross Traffic

2A	Approach Lanes	1		2 or more		Average Hourly Volume
	Flow Conditions	Free	Restricted	Free	Restricted	
		X				
	Major Street Approaches	480	720	600	900	719
					% Fulfilled	149.7%

2B	Approach Lanes	1		2 or more		Average Hourly Volume
	Flow Conditions	Free	Restricted	Free	Restricted	
		X				
	Traffic Crossing Major Street	50	75	50	75	49
					% Fulfilled	98.5%

July 11, 2024
Project No. 2402380 (223030-2)

VIA EMAIL: jiezzi@owensound.ca

Jacklyn Iezzi, BES.
Senior Planner

City of Owen Sound
808 2nd Ave. East
Owen Sound, Ontario N4K 2H4

Re: Conceptual Engineering in Support of Severance Application
16th Street East and 28th Avenue
Bruce-Grey Catholic District School Board

Dear Jacklyn:

This letter is respectfully submitted in support of the severance application for the Bruce Grey Catholic District School Board for lands on 28th Avenue East, and that additional clarity is requested regarding conceptual servicing for municipal water supply and for drainage/stormwater management. The following outlines and summarizes our discussions to date and the conceptual plans regarding these servicing items. It should be recognized that as the development progresses, the concept may change in detail, but the overall principles are likely to remain. We have met with City Staff throughout the process and this report reflects the outcomes of those meetings.

Water Supply:

The lands are within the East Hill Booster Pressure Zone (EHBPZ) and, as such, will require an extension from the existing watermain on 8th St. E., easterly to the rail trail, then northerly along the rail trail to the site. This follows the alignment of the trunk sanitary sewer previously installed by the City to service Sydenham Heights Phases 3 and 4.

In our discussions with City staff, there is interest in further extending this EHBPZ watermain northerly from the site and across 16th St. E. (Highway 26) to connect, via a Pressure Reducing / Pressure Sustaining valve system, to the Industrial Pressure Zone (IPZ) watermain system within the East Ridge Business Park (VanDolder Home Team lands).

July 11, 2024

Drainage and Stormwater Management:

The lands east of the rail trail and west of 28th Ave E are drained initially from the northeasterly corner at 16th St E, on a southwesterly angle to the ditch along the north side of 8th St E. Flows are then directed westerly, and northwesterly again crossing the lands to just south of 16th St E, where flows previously were diverted to the easterly rail trail ditch system. From here they flow to the Telfer Creek tributary. The drainage path is illustrated on the attached figure. Previous discussions with the GSCA (summary attached) considered diversion of flows from east to west along the northerly and southerly sides of the lands to be severed, as illustrated. The proponent has initiated a natural environment study to investigate potential impacts and mitigation measures should this alternative drainage concept proceed. Further, since natural flows would be diverted from downstream lands GSCA requested that the proponent obtain a release from the downstream landowner(s) to authorize such diversion. Should such authorization not be granted from the downstream landowners, then a piped system would be required to convey flows across the severed site to maintain natural flows across downstream lands. Either of these drainage alternatives would require review and approval by the GSCA, at the design stage. In either case, water from the lands to be retained will continue to exit those lands in the same location and travel to the same ultimate outlet of the tributary.

On-site development related runoff would be kept separate from off-site flows and managed on-site through various stormwater management techniques to address runoff quantity and quality. A combination of roof top storage, underground and surface ponding would be sized at the design stage to mitigate increased peak flows from hardened surfaces prior to release from the site. An on-site oil-grit separator or constructed forebay are proposed to remove impurities from parking lot areas and other hardened surfaces. Managed flows would be released from the site to the rail trail easterly ditch. Again, approvals from the GSCA would be required for such stormwater management works.

Additional details for both water supply and stormwater management would be developed through the design development phase.

Trusting this is sufficient for the planning purposes at this time, I remain,

Yours Very Truly,

GEI Consultants Canada Limited.

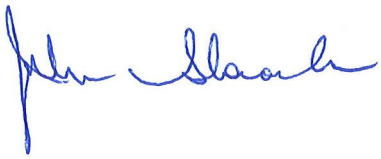

John Slocombe, P.Eng.
JBS:clw
Encl. (3) Conceptual Grading Plan, Drainage Figure, GSCA Summary
cc: Chad Aitken - chad.aitken@bgcdsb.org
Amanda Froese, P. Eng. - afroese@geiconsultants.com
File No. 2402380 (223030-2)